Spezifikation für Freigabe / specification for release

Kunde / customer :
Artikelnummer / part number : **744066331**

Bezeichnung : **SPEICHERDROSSEL WE-TPC**
description : **POWER-CHOKE WE-TPC**

DATUM / DATE : 2008-11-24

A Mechanische Abmessungen / dimensions :

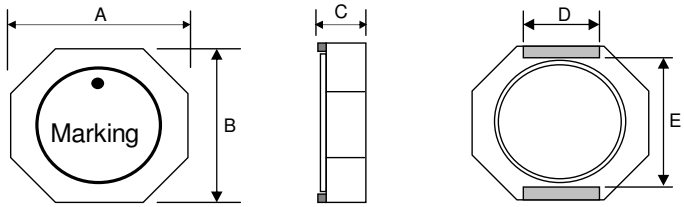

	Typ XLH	
A	**10 ± 0,3**	mm
B	**10 ± 0,3**	mm
C	**3,8 ± 0,3**	mm
D	**4,2 ref.**	mm
E	**7,4 ref.**	mm

● = Start of winding Marking = Inductance code

B Elektrische Eigenschaften / electrical properties :

Eigenschaften / properties	Testbedingungen / test conditions		Wert / value	Einheit / unit	tol.
Induktivität / inductance	**100 kHz / 1,0V**	L	**330,00**	µH	**± 30%**
DC-Widerstand / DC-resistance	**@ 20℃**	$R_{DC\ typ}$	**785,00**	mΩ	**typ.**
DC-Widerstand / DC-resistance	**@ 20℃**	$R_{DC\ max}$	**1000,00**	mΩ	**max.**
Nennstrom / rated current	**ΔT=30 K**	I_{DC}	**0,60**	A	**max.**
Sättigungsstrom / saturation current	**|ΔL/L|<35%**	I_{sat}	**0,70**	A	**typ.**
Eigenres.-Frequenz / self-res.-fequency		SRF	**6,0**	MHz	**typ.**

C Lötpad / soldering spec. :

[mm]

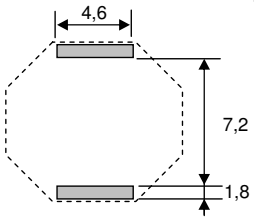

D Prüfgeräte / test equipment :

HP 4274 A für/for L und/and SRF
HP 34401 A für/for I_{DC} und/and R_{DC}

E Testbedingungen / test conditions :

Luftfeuchtigkeit / humidity:	33%
Umgebungstemperatur / temperature:	+20℃

F Werkstoffe & Zulassungen / material & approvals :

Basismaterial / base material:	Ferrit / ferrite
Draht / wire:	Class H
Endoberfläche / finishing electrode:	Sn/Ag/Cu - 96.5/3.0/0.5%

G Eigenschaften / general specifications :

Betriebstemp. / operating temperature: -40℃ - + 125℃
Umgebungstemp. / ambient temperature: -40℃ - + 85℃
It is recommended that the temperature of the part does not exceed 125℃ under worst case operating conditions.

Freigabe erteilt / general release:

Kunde / customer		
Datum / date	Unterschrift / signature	
Würth Elektronik		
Geprüft / checked	Kontrolliert / approved	

ME	Version 4	08-11-24
MST	Version 3	08-04-11
ME	Version 1	04-10-11
Name	**Änderung / modification**	Datum / date

Würth Elektronik eiSos GmbH & Co. KG
D-74638 Waldenburg · Max-Eyth-Strasse 1 - 3 · Germany · Telefon (+49) (0) 7942 - 945 - 0 · Telefax (+49) (0) 7942 - 945 - 400
http://www.we-online.de

Spezifikation für Freigabe / specification for release

Kunde / customer :
Artikelnummer / part number : **744066331**

LF

Bezeichnung : **SPEICHERDROSSEL WE-TPC**
description : **POWER-CHOKE WE-TPC**

DATUM / DATE : 2008-11-24

H Induktivitätskurve / Inductance curve :

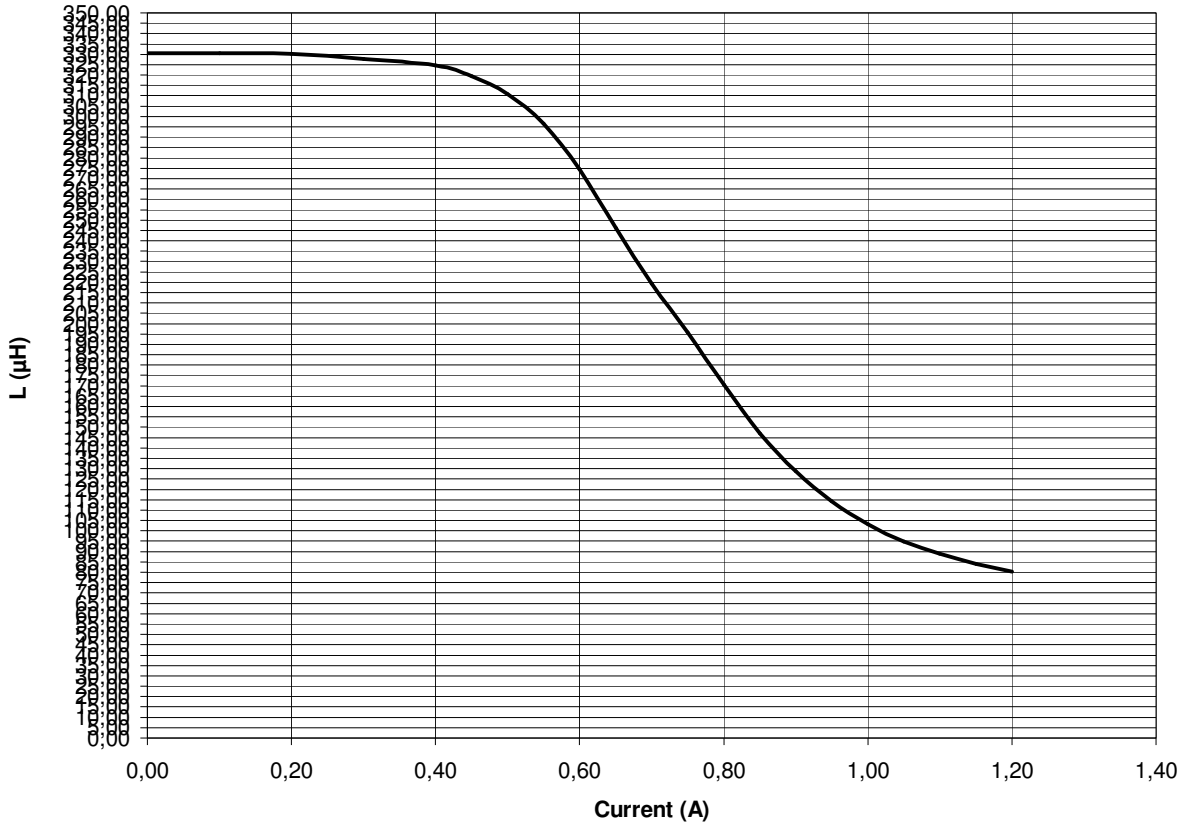

Freigabe erteilt / general release:	**Kunde / customer**			
Datum / date	Unterschrift / signature	ME	Version 4	08-11-24
	Würth Elektronik	MST	Version 3	08-04-11
		ME	Version 1	04-10-11
Geprüft / checked	Kontrolliert / approved	Name	**Änderung / modification**	Datum / date

Würth Elektronik eiSos GmbH & Co. KG
D-74638 Waldenburg · Max-Eyth-Strasse 1 - 3 · Germany · Telefon (+49) (0) 7942 - 945 - 0 · Telefax (+49) (0) 7942 - 945 - 400
http://www.we-online.de

Spezifikation für Freigabe / specification for release

Kunde / customer :
Artikelnummer / part number : **744066331**

LF

Bezeichnung : **SPEICHERDROSSEL WE-TPC**
description : **POWER-CHOKE WE-TPC**

DATUM / DATE : 2008-11-24

I Rollenspezifikation / Tape and reel specification :

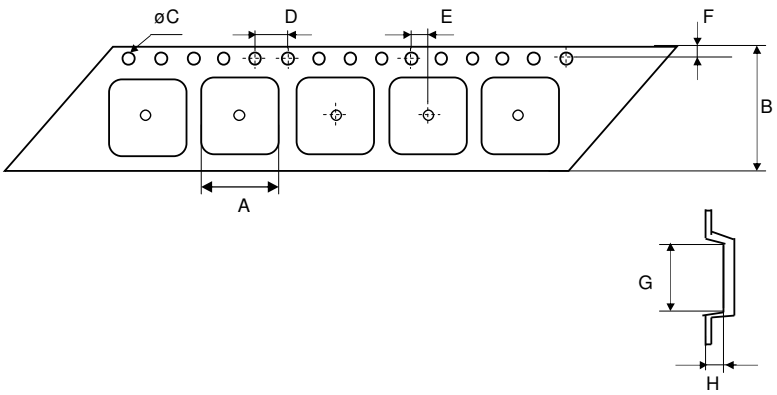

Gurtspezifikation / Tape specification:		
A	**6,6 ± 0,1**	mm
B	**16,0 ± 0,3**	mm
C	**1,50 ± 0,1**	mm
D	**4,00 ± 0,1**	mm
E	**2,00 ± 0,1**	mm
F	**1,75 ± 0,1**	mm
G	**7,00 ± 0,1**	mm
H	**3,40 ± 0,1**	mm

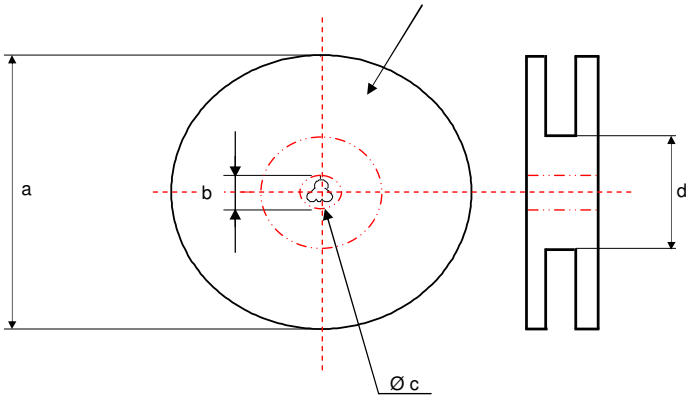

Rollenspezifikation / Reel specification:		
a	**330,0 ± 0,5**	mm
b	**20,20 ± 0,1**	mm
c	**13,00 ± 1,0**	mm
d	**100,0 ± 1,0**	mm

Freigabe erteilt / general release:

Kunde / customer

Datum / date — Unterschrift / signature

Würth Elektronik

Geprüft / checked — Kontrolliert / approved

Name	Änderung / modification	Datum / date
ME	Version 4	08-11-24
MST	Version 3	08-04-11
ME	Version 1	04-10-11

This electronic component has been designed and developed for usage in general electronic equipment. Before incorporating this component into any equipment where higher safety and reliability is especially required or if there is the possibility of direct damage or injury to human body, for example in the range of aerospace, aviation, nuclear control, submarine, transportation, (automotive control, train control, ship control), transportation signal, disaster prevention, medical, public information network etc, Würth Elektronik eiSos GmbH must be informed before the design-in stage. In addition, sufficient reliability evaluation checks for safety must be performed on every electronic component which is used in electrical circuits that require high safety and reliability functions or performance.

Würth Elektronik eiSos GmbH & Co. KG
D-74638 Waldenburg · Max-Eyth-Strasse 1 - 3 · Germany · Telefon (+49) (0) 7942 - 945 - 0 · Telefax (+49) (0) 7942 - 945 - 400
http://www.we-online.de