- **Port size: DN 10, 1/4" ... 1/2" (ISO G/NPT)**
- **Functional design**
- **Compact solenoid with integrated core tube**
- **Valve operates without differential pressure**
- **Operating pressure 0 … 20 bar with alternating current and NBR sealing**

Technical features

Medium:
Neutral gases and liquids
Switching function:
Normally closed
Operation:
Solenoid actuated, with forced lifting
Mounting position:
Optional, preferably solenoid vertical on top

Flow direction:
Determined
Port size:
G1/4, G3/8, G1/2, 1/4 NPT, 3/8 NPT, 1/2 NPT
Operating pressure:
0 … 10 bar (0 ... 145 psi)

Fluid temperature:
–10° ... +90°C (+14° ... +194°F)
Ambient temperature:
–10° ... +50°C (+14° ... +122°F)

Material:
Body: Brass (CW617N), PA66
Seat seal: NBR
Internal parts: Stainless steel, PVDF

For contaminated fluids insertion of a strainer is recommended.

Technical data - standard models

Symbol	Port size	Orifice (mm)	Valve length (mm)	Flow kv value *1) (m^3/h)	Operating pressure *2) (bar)	Weight (kg)	Model Solenoid in V d.c./a.c.
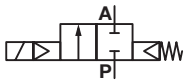	G1/4	10	44	1,5	0 ... 10	0,5	8253000.8001.xxxxx
	1/4 NPT	10	44	1,5	0 ... 10	0,5	8263000.8001.xxxxx
	G3/8	10	44	1,7	0 ... 10	0,5	8253100.8001.xxxxx
	3/8 NPT	10	44	1,7	0 ... 10	0,5	8263100.8001.xxxxx
	G1/2	10	60	1,7	0 ... 10	0,6	8253200.8001.xxxxx
	1/2 NPT	10	60	1,7	0 ... 10	0,6	8263200.8001.xxxxx

xxxxx Please insert voltage and frequency codes
*1) Cv-value (US) ≈ kv value x 1,2
*2) For gases and liquid fluids up to 25 mm^2/s (cSt)

Option selector

82★3★★★.8001.★★★★★

Thread form	Substitute
ISO G	5
NPT	6
Port size	**Substitute**
1/4"	0
3/8"	1
1/2"	2
Valve options	**Substitute**
Seat seal FPM, for fuel and oil, max. fluid temperature +110°C	03
Seat seal EPDM, for hot water, max. fluid temperature +110°C	14
Degreased version, Seat seal FPM	18
Operating pressure 0 ... 20 bar, only for NBR and a.c. solenoid	22
Seat seal HNBR, for hot water and steam, Operating pressure 0 ... 6 bar, Fluid temperature 0 ... +150°C (+32 ... +302°F)	51

Frequency	Substitute
See table frequency codes	xx
Voltage	**Substitute**
See Voltage codes	xxx

Standard solenoid systems

Voltage and Frequency Solenoid 8001					
Code Voltage	Code Frequency	Voltage	Frequency	Power consumption	
				Inrush	Holding
024	00	24 V d.c.	-	12 W	12 W
024	50	24 V a.c.	50 Hz	20 VA	20 VA
110	50	110 V a.c.	50 Hz	20 VA	20 VA
120	60	120 V a.c.	60 Hz	20 VA	20 VA
230	50	230 V a.c.	50 Hz	20 VA	20 VA

Further versions on request!

Electrical details for all solenoid systems

Design	DIN VDE 0580
Voltage range	±10%
Duty cycle	100% ED
Protection class	EN 60529 IP65
Socket	Form A acc. to DIN EN 175301-803 (included)

According to DIN VDE 0580 at a solenoid temperature of +20°C.
At operating state temperature the input power of a coil decreases by up to ca. 30% due to physical reasons.

Additional solenoid systems

ATEX category	Protection class	Solenoid	Standard voltages
II2GD	EEx me II T3 T 140°C	8041	24 V d.c., 110 V a.c., 230 V a.c.

Attention!
The conditions imposed on the Ex approvals lead to reduction of the permissible standard temperature ranges in the cases of explosion protected solenoids.

Additional solenoid systems

Option	Solenoid	Standard voltages
D.c. solenoid wi h rectifier for a.c. only	8004	24 V d.c., 110 V a.c., 230 V a.c.

Section View

G1/4 ... 1/2
1/4 ... 1/2 NPT

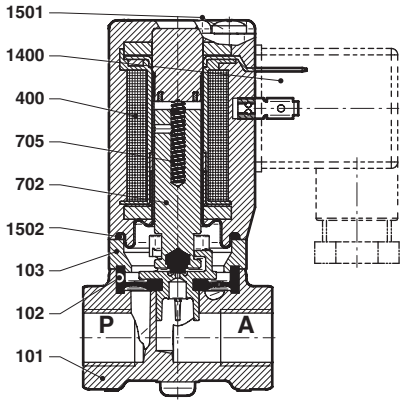

No.	Description
101	Valbe body
*102	Diaphragm
103	Spacer
400	Solenoid
*702	Plunger
*705	Pressure spring
1400	Socket (included)
1501	Oval head cap screw
*1502	O-ring

* These individual parts form a complete wearing unit.
When ordering spare parts please state Model No. and Series No.

Dimensions

G1/4 ... 1/2
1/4 ... 1/2 NPT

Dimensions in mm
Projection/First angle

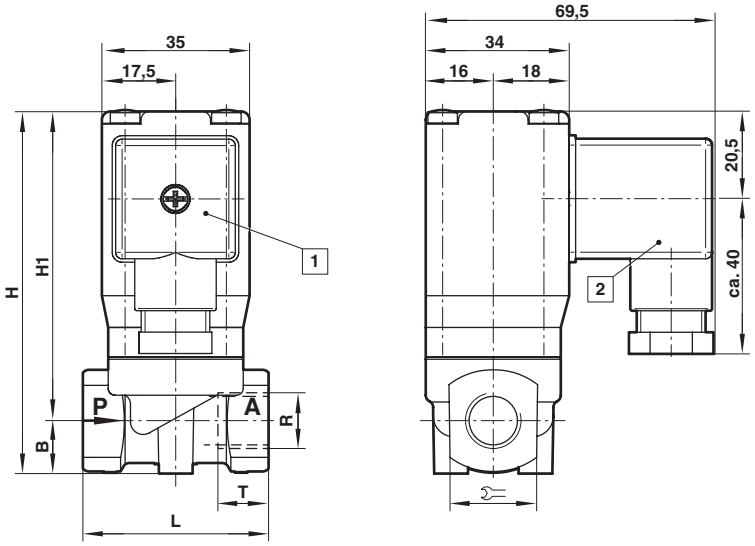

1 Solenoid rotatable 360°
2 Socket turnable 4 x 90°
(Socket included)

Port size R	B	H	H1	L	⌲	T	Model
G1/4	14	87	73	44	21	12	8253000.8001.xxxxx
1/4 NPT	14	87	73	44	21	10	8263000.8001.xxxxx
G3/8	14	87	73	44	21	12	8253100.8001.xxxxx
3/8 NPT	14	87	73	44	21	10	8263100.8001.xxxxx
G1/2	14	90	74,5	60	27	15	8253200.8001.xxxxx
1/2 NPT	14	90	74,5	60	27	13	8263200.8001.xxxxx

Note to Pressure Equipment Directive (PED):
The valves of this series are according to Art. 3 § 3 of the Pressure Equipment Directive (PED) 97/23/EG. This means interpretation and production are in accordance to engineers practice wellknown in the member countries.

The CE-sign at the valve refers not to the PED. Thus the declaration of conformity is not longer applicable for this directive.

Note to Electromagnetic Compatibility Guideline (EEC):
The valves shall be provided with an electrical circuit which ensures the limits of the harmonised standards EN 61000-6-3 and EN 61000-6-1 are observed, and hence the requirements of the Electromagnetic Compatibility Guideline (2004/108/EG) satisfield.