REV.	DATE	DESCRIPTION
NC	4/1/97	INITIAL RELEASE

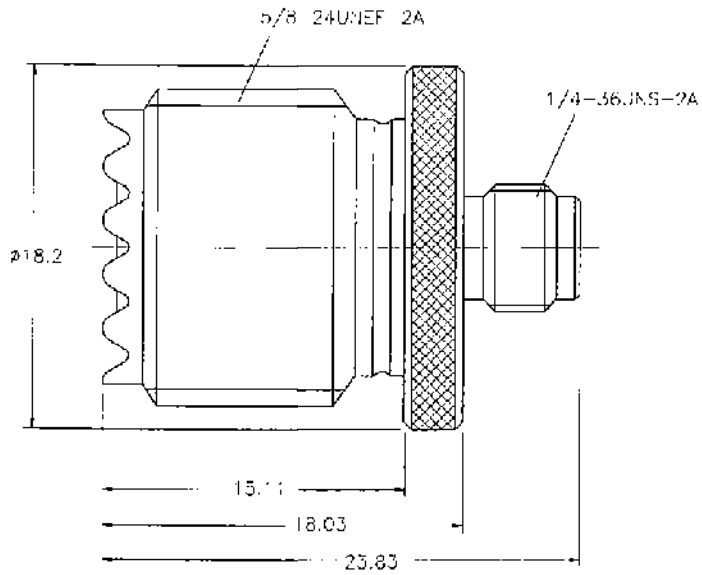

	DESCRIPTION	MATERIAL	FINISH
1	BODY	BRASS	NICKEL
2	CONTACT PIN	PHOS. BRONZE	GOLD
3	INSULATOR	TEFLON	NATURAL
4			
5			
6			
7			
8			

DIMENSIONS ARE IN MILLIMETERS
UNLESS OTHERWISE SPECIFIED TOLERANCES ARE:

0.5–6 = ± 0.2
6–30 = ± 0.4
30–120 = ± 0.6
120–315 = ± 1
315–1000 = ± 1.6
1000–2000 = ± 2.4

DO NOT SCALE DRAWING

APPROVALS		DATE
DRAWN	G.R.S.	4/1/97
CHECKED		
ISSUED		

connex
Connector Corporation

TITLE: SMA FEMALE TO UHF FEMALE ADAPTOR

SIZE	ESCM NO	DWG. NO.	REV.
A	99001	242111.DWG	NC

SCALE	PART NO	SHEET
4:1	242111	1 OF 1