NX-series Safety Control Units

# NX-SL/SI/SO

CSM_NX-SL_SI_SO_E_4_9

## Integration of Safety into Machine Automation Enables Simple, Flexible System Configuration.

- EN ISO13849-1 (PLe/Safety Category4), IEC 61508 (SIL3) certified.
- One connection using Safety over EtherCAT (FSoE) * protocol enables flexible configuration by mixing the Safety Units with standard NX I/O.
- Hardware and safety circuits can be configured using the Sysmac Studio (Ver. 1.07)

For the most recent information on models that have been certified for safety standards, refer to your OMRON website.

* Safety over EtherCAT (FSoE): The open protocol Safety over EtherCAT (abbreviated with FSoE "FailSafe over EtherCAT") defines a safety related communication layer for EtherCAT. Safety over EtherCAT meets the requirements of IEC 61508 SIL 3 and enables the transfer of safe and standard information on the same communication system without limitations with regard to transfer speed and cycle time.

## Features

- Integrated safety into machine automation possible by connecting with the NX-series EtherCAT Coupler.
- The Safety CPU Unit controls up to 128 Safety I/O Units.
- 4 or 8 points per Safety Input Unit. The 4-point Safety Input Unit can be directly connected with OMRON Non-contact Switches and Singlebeam Sensors.
- 2 or 4 points per Safety Output Unit. The 2-point Safety Output Unit is characterized by large output breaking current of 2.0 A.
- The Safety Units can be freely allocated in any combination with standard NX I/O.
- Compliant with IEC61131-3
- Safety programs can be standardized and reused efficiently by using POUs for design and operation.

# System Configuration

## EtherCAT System

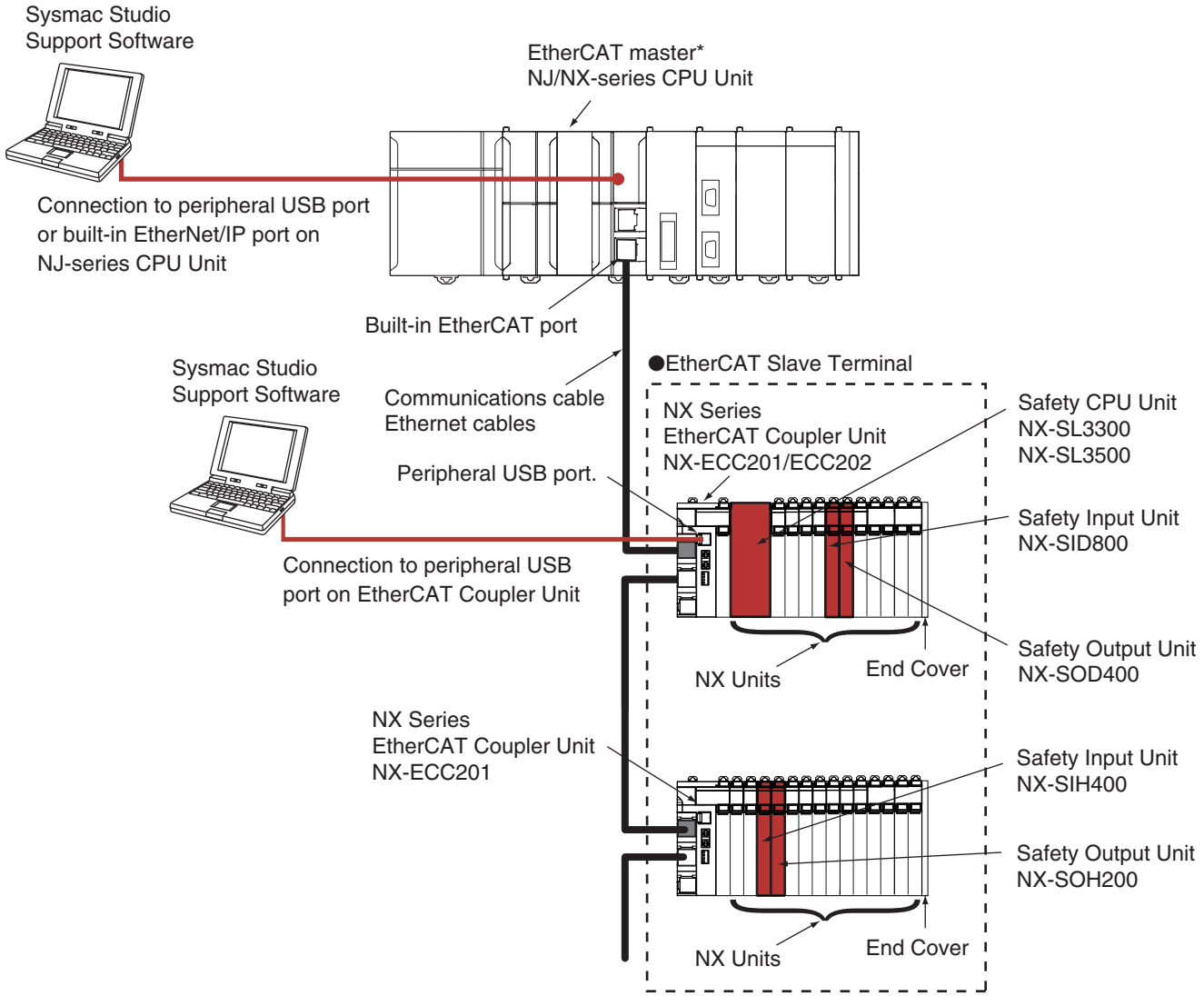


* OMRON CJ1W-NC□81/□82 Position Control Units cannot be connected to the EtherCAT Slave Terminal even though they support EtherCAT.

## Stand-alone System

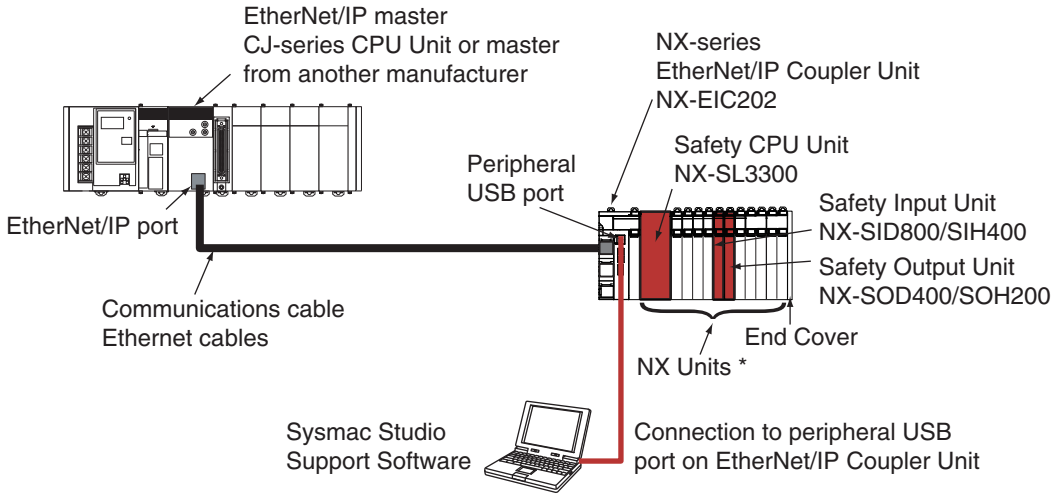


* Refer to *NX-series EtherNet/IP™ Coupler Unit Datasheet* for the NX Units that can be connected to the NX-series EtherNet/IP Coupler Unit.

# Ordering Information

## Safety CPU Unit

| Unit type | Appearance | Specifications | | | | Unit version | Model |
|---|---|---|---|---|---|---|---|
| | | Maximum number of safety I/O points | Program capacity | Number of safety I/O connections | I/O refreshing method | | |
| Safety CPU Unit (NX-SL3□00) |  | 256 points | 512KB | 32 | Free-Run refreshing | Ver. 1.1 | **NX-SL3300** |
| |  | 1024 points | 2048KB | 128 | Free-Run refreshing | Ver. 1.1 | **NX-SL3500** |

**Note:** Refer to the *NX-CSG/SL5/SI/SO Datasheet* (www.ia.omron.com/) for details of the NX-SL5□□□ Safety CPU Unit.

## Safety Input Units

| Unit type | Appearance | Specifications | | | | | | | Unit version | Model |
|---|---|---|---|---|---|---|---|---|---|---|
| | | Number of safety input points | Number of test output points | Internal I/O common | Rated input voltage | OMRON special safety input devices | Number of safety slave connections | I/O refreshing method | | |
| Safety Input Units |  | 4 points | 2 points | Sinking inputs (PNP) | 24 VDC | Can be connected. ✻ | 1 | Free-Run refreshing | Ver. 1.1 | **NX-SIH400** |
| |  | 8 points | 2 points | Sinking inputs (PNP) | 24 VDC | Cannot be connected. | 1 | Free-Run refreshing | Ver. 1.0 | **NX-SID800** |

✻ The following OMRON special safety input devices can be connected directly without a special controller.
For detail of connectable OMRON special safety input devices,refer to NX-series Safety Control Units User's Manual (Cat.No.Z930).

| Type | Model and corresponding PL and safety category |
|---|---|
| OMRON Single-beam Safety Sensors | E3ZS and E3FS |
| OMRON Non-contact Door Switches | D40Z<br>D40A |
| OMRON Safety Mats | UM, UMA |
| OMRON Safety Edges | SGE (4-wire connection) |

## Safety Output Units

| Unit type | Appearance | Specifications | | | | | | Unit version | Model |
|---|---|---|---|---|---|---|---|---|---|
| | | Number of safety output points | Internal I/O common | Maximum load current | Rated voltage | Number of safety slave connections | I/O refreshing method | | |
| Safety Output Units |  | 2 points | Sourcing outputs (PNP) | 2.0 A/point, 4.0 A/Unit at 40°C, and 2.5 A/Unit at 55°C<br>The maximum load current depends on the installation orientation and ambient temperature. | 24 VDC | 1 | Free-Run refreshing | Ver. 1.0 | **NX-SOH200** |
| |  | 4 points | Sourcing outputs (PNP) | 0.5 A/point and 2.0 A/Unit | 24 VDC | 1 | Free-Run refreshing | Ver. 1.0 | **NX-SOD400** |

## Option

| Product Name | Specification | Model |
|---|---|---|
| Unit/Terminal Block Coding Pins | For 10 Units (Terminal Block: 30 pins, Unit: 30 pins) | **NX-AUX02** |

| Product name | Specification | | | | Model |
|---|---|---|---|---|---|
| | No. of terminals | Terminal number indications | Ground terminal mark | Terminal current capacity | |
| Terminal Block | 8 | A/B | None | 10A | **NX-TBA082** |
| | 16 | A/B | None | 10A | **NX-TBA162** |

# Accessories

Not included.

# Configuration Devices

## NX-series Communications Coupler Units

| Product name | Appearance | Supported communications protocol | NX Unit power consumption | Maximum I/O power supply current | Model |
|---|---|---|---|---|---|
| **EtherCAT Coupler Unit *1** |  | Communications cycle in DC Mode *2<br>250 to 4,000 µs | 1.45 W or lower | 4A | **NX-EEC201** |
| | | Communications cycle in DC Mode *2<br>125 to 10,000 µs | 1.25 W or lower | 10A | **NX-EEC202** |
| | | | | | **NX-EEC203** |
| **EtherNet/IP Coupler Unit *1** |  | EtherNet/IP | 1.60 W or lower | 10A | **NX-EIC202** |

**Note:** For details, refer to your local OMRON website.
**✻1** One End Cover NX-END01 is provided with the NX-series Communications Coupler Units.
**✻2** This depends on the specifications of the EtherCAT master. For example, the values are as follows when the EtherCAT Coupler Unit is connected to the built-in EtherCAT port on an NJ5-series CPU Unit: 500 µs, 1,000 µs, 2,000 µs, and 4,000 µs. Refer to the NJ/NX-series CPU Unit Built-in EtherCAT Port User's Manual (Cat. No. W505) for the specifications of the built-in EtherCAT ports on NJ/NX-series CPU Units. This also depends on the unit configuration.

## Automation Software Sysmac Studio

Please purchase a DVD and required number of licenses the first time you purchase the Sysmac Studio. DVDs and licenses are available individually. Each model of licenses does not include any DVD.

| Product name | Specifications | Number of licenses | Media | Model |
|---|---|---|---|---|
| **Sysmac Studio NX-I/O Edition Ver.1.□□ *1** | Sysmac Studio NX-I/O Edition is a limited license that provides selected functions required for EtherNet/IP Coupler settings.<br>✻ Because this product is a license only, you need the Sysmac Studio Standard Edition DVD media to install it. | 1 license | --- | **SYSMAC-NE001L** |
| **Sysmac Studio Safety Edition Ver.1.□□ *2** | Sysmac Studio Safety Edition is a license including necessary setting functions for the safety control system.<br>✻ Because this product is a license only, you need the Sysmac Studio Standard Edition DVD media to install it. | 1 license | --- | **SYSMAC-FE001L** |
| **Sysmac Studio Standard Edition Ver.1.□□ *3*4** | The Sysmac Studio is the software that provides an integrated environment for setting, programming, debugging and maintenance of machine automation controllers including the NJ/NX-series CPU Units, NY-series Industrial PC,EtherCAT Slave, and the HMI. | 1 license *5 | --- | **SYSMAC-SE201L** |
| | Sysmac Studio runs on the following OS.<br>Windows 7(32-bit/64-bit version)/8(32-bit/64-bit version)/8.1(32-bit/64-bit version)/10(32-bit/64-bit version)<br>✻ Refer to your OMRON website for details such as supported models and functions. | (Media only) | DVD | **SYSMAC-SE200D** |

**✻1** With the NX-I/O Edition, you can use only the setup functions for EtherNet/IP Coupler.
**✻2** Safety Edition can be used with Communication Control Unit and EtherNet/IP Coupler Unit.
**✻3** The Sysmac Studio Standard Edition with license(s) (SYSMAC-SE□□□L) provides functions of the NX-I/O Edition (SYSMAC-NE001L).
**✻4** With the Sysmac Studio Standard Edition with license(s) (SYSMAC-SE□□□L) version 1.10 or higher, you can use the setup functions for the EtherNet/IP Coupler.
**✻5** Multi licenses are available for the Sysmac Studio (3, 10, 30, or 50 licenses).

# Specifications

## Regulations and Standards

### NX-series Safety Control Units NX-SL3/SI/SO

| Certification body | Standards |
|---|---|
| **TÜV Rheinland ✻** | • EN ISO 13849-1<br>• EN ISO 13849-2<br>• IEC 61508 parts 1-7<br>• IEC/EN 62061<br>• IEC/EN 61131-2<br>• IEC 61326-3-1 |
| **UL** | • NRAG (UL 508 and ANSI/ISA 12.12.01)<br>• NRAG7 (CSA C22.2 No. 142 and CSA C22.2 No. 213) |

✻ The FSoE was certified for applications in which OMRON FSoE devices are connected to each other.

The NX-series Safety Control Units allow you to build a safety control system that meets the following standards.

- Requirements for SIL 3 (Safety Integrity Level 3) in IEC 61508, EN 62061, (Functional Safety of Electrical/Electronic/Programmable Electronic Safety-related Systems)
- Requirements for PLe (Performance Level e) and for safety category 4 in EN ISO13849-1

The NX-series Safety Control Units are also registered for RCM, EAC, and KC compliance.

## General Specifications

| Item | | Specification |
|---|---|---|
| Enclosure | | Mounted in a panel (open) |
| Grounding method | | Ground to 100 Ω or less. |
| Operating environment | Ambient operating temperature | 0 to 55°C (The upper limit of the ambient operating temperature is restricted by the installation orientation.) |
| | Ambient operating humidity | 10% to 95% (with no condensation or icing) |
| | Atmosphere | Must be free from corrosive gases. |
| | Ambient storage temperature | –25 to 70°C (with no condensation or icing) |
| | Altitude | 2,000 m max. |
| | Pollution degree | 2 or less. |
| | Noise immunity | Conforms to IEC 61131-2.<br>2 kV on power supply line (Conforms to IEC 61000-4-4.) |
| | Insulation class | Class III (SELV) |
| | Overvoltage category | II |
| | EMC immunity level | Zone B |
| | Vibration resistance | Conforms to IEC 60068-2-6.<br><br>5 to 8.4 Hz with 3.5-mm amplitude, 8.4 to 150 Hz, acceleration of 9.8 $m/s^2$, 100 minutes each in X, Y, and Z directions (10 sweeps of 10 min each = 100 min total) |
| | Shock resistance | Conforms to IEC 60068-2-27.<br><br>147 $m/s^2$, 3 times each in X, Y, and Z directions |
| | Insulation resistance | 20 MΩ between isolated circuits (at 100 VDC) |
| | Dielectric strength | 510 VAC for 1 min between isolated circuits, leakage current: 5 mA max. |
| Installation method | | DIN Track (IEC 60715 TH35-7.5/TH35-15) |

# Specifications of Individual Units

### Safety CPU Unit NX-SL3300/SL3500

| Unit name | Safety CPU Unit | |
|---|---|---|
| **Model** | NX-SL3300 | NX-SL3500 |
| **Maximum number of safety I/O points** | 256 points | 1024 points |
| **Program capacity** | 512 KB | 2048 KB |
| **Number of safety master connections** | 32 | 128 |
| **I/O refreshing method** | Free-Run refreshing | |
| **External connection terminals** | None | |
| **Indicators** | [FS] LED, [VALID] LED, [DEBUG] LED,<br>[TS] LED, [RUN] LED<br> 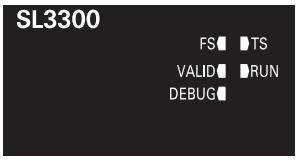 | [FS] LED, [VALID] LED, [DEBUG] LED,<br>[TS] LED, [RUN] LED<br> 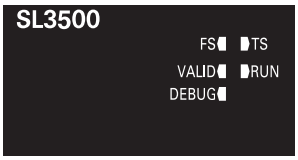 |
| **Dimensions** | 30 × 100 × 71 mm (W × H × D) | |
| **I/O power supply method** | Not supplied. | |
| **Current capacity of I/O power supply terminals** | No I/O power supply terminals | |
| **NX Unit power consumption ✻1** | • Connected to a CPU Unit<br>1.25 W max.<br>• Connected to a Communications Coupler Unit<br>0.90 W max. | |
| **Current consumption from I/O power supply** | No consumption | |
| **Weight** | 75 g max. | |
| **Installation orientation and restrictions** | Installation orientation:<br>• Connected to a CPU Unit ✻2<br>Possible in the upright installation orientation.<br>• Connected to a Communications Coupler Unit<br>Six possible orientations.<br>Restriction: None | |

**✻1** The cable length for the Units that supply power to the corresponding Unit must be up to 20 m.
**✻2** Only NX102 CPU Units can be connected. NX1P2 CPU Units cannot be connected.

## Safety Input Units NX-SIH400/SID800

| Unit name | Safety Input Unit | |
|---|---|---|
| **Model** | NX-SIH400 | NX-SID800 |
| **Number of safety input points** | 4 points | 8 points |
| **Number of test output points** | 2 points | 2 points |
| **Internal I/O common** | PNP (sinking inputs) | |
| **Rated input voltage** | 24 VDC (20.4 to 28.8 VDC) | |
| **OMRON special safety input devices** | Can be connected. | Cannot be connected. |
| **Number of safety slave connections** | 1 | |
| **I/O refreshing method** | Free-Run refreshing | |
| **External connection terminals** | Screwless clamping terminal block (8 terminals) | Screwless clamping terminal block (16 terminals) |
| **Indicators** | [TS] LED, [FS] LED, [IN] LED, [IN ERR] LED<br> 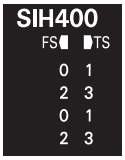 <br> | [TS] LED, [FS] LED, [IN] LED, [IN ERR] LED<br>  <br> |
| **Safety input current** | 4.5 mA typical | 3.0 mA typical |
| **Safety input ON voltage** | 11 VDC min. | 15 VDC min. |
| **Safety input OFF voltage/OFF current** | 5 VDC max., 1 mA max. | |
| **Test output type** | Sourcing outputs (PNP) | |
| **Test output load current** | 25 mA max. | 50 mA max. |
| **Test output residual voltage** | 1.2 V max. (Between IOV and all output terminals) | |
| **Test output leakage current** | 0.1 mA max. | |
| **Dimensions** | 12 × 100 × 71 mm (W × H × D) | |
| **Isolation method** | Photocoupler isolation | |
| **Insulation resistance** | 20 MΩ min. between isolated circuits (at 100 VDC) | |
| **Dielectric strength** | 510 VAC for 1 min between isolated circuits, leakage current: 5 mA max. | |
| **I/O power supply method** | Power supplied from the NX bus | |
| **Current capacity of I/O power supply terminals** | No applicable terminals. | |
| **NX Unit power consumption** | • Connected to a CPU Unit or a Communication Control Unit 1.10 W max.<br>• Connected to a Communications Coupler Unit 0.70 W max. | • Connected to a CPU Unit or a Communication Control Unit 1.10 W max.<br>• Connected to a Communications Coupler Unit 0.75 W max. |
| **Current consumption from I/O power supply** | 20 mA max. | |
| **Weight** | 70 g max. | |
| **Circuit layout** | 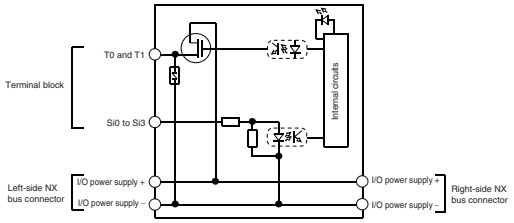 <br> | 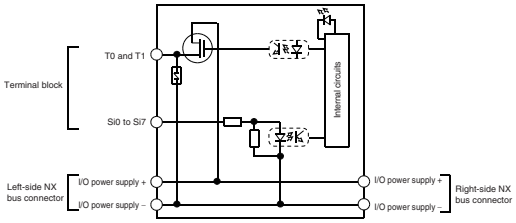 <br> |
| **Terminal connection diagram** | Si0 to Si3: Safety input terminals<br>T0 and T1: Test output terminals<br> 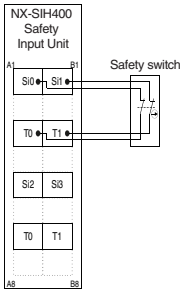 <br><br>Refer to User's manual (Cat.No.Z930) for details. | Si0 to Si7: Safety input terminals<br>T0 and T1: Test output terminals<br> 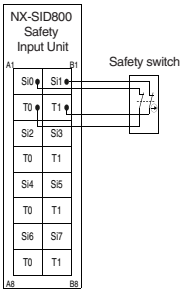 <br><br>Refer to User's manual (Cat.No.Z930) for details. |
| **Installation orientation and restrictions** | Installation orientation:<br>• Connected to a CPU Unit or a Communication Control Unit<br>Possible in the upright installation orientation.<br>• Connected to a Communications Coupler Unit<br>6 possible orientations.<br>Restrictions: Maximum ambient temperature is 50ºC for any orientation other than upright installation. | |
| **Protective functions** | Overvoltage protection circuit and short detection (test outputs) | |

## Safety Output Units NX-SOH200/SOD400

| Unit name | Safety Output Unit | |
|---|---|---|
| **Model** | NX- SOH200 | NX-SOD400 |
| **Number of safety output points** | 2 points | 4 points |
| **Internal I/O common** | PNP (sourcing outputs) | |
| **Maximum load current** | 2.0 A/point<br>4.0 A/Unit at 40°C<br>2.5 A/Unit at 55°C<br>The maximum load current depends on the installation orientation and ambient temperature | 0.5 A/point and 2.0 A/Unit |
| **Rated voltage** | 24 VDC (20.4 to 28.8 VDC) | |
| **Number of safety slave connections** | 1 | |
| **I/O refreshing method** | Free-Run refreshing | |
| **External connection terminals** | Screwless clamping terminal block (8 terminals) | |
| **Indicators** | [TS] LED, [FS] LED, [OUT] LED, [OUT ERR] LED<br>  | [TS] LED, [FS] LED, [OUT] LED, [OUT ERR] LED<br>  |
| **Safety output ON residual voltage** | 1.2 V max. (Between IOV and all output terminals) | |
| **Safety output OFF residual voltage** | 2 V max. (Between IOG and all output terminals) | |
| **Safety output leakage current** | 0.1 mA max. | |
| **Dimensions** | 12 × 100 × 71 mm (W × H × D) | |
| **Isolation method** | Photocoupler isolation | |
| **Insulation resistance** | 20 MΩ min. between isolated circuits (at 100 VDC) | |
| **Dielectric strength** | 510 VAC for 1 min between isolated circuits, leakage current: 5 mA max. | |
| **I/O power supply method** | Power supplied from the NX bus | |
| **Current capacity of I/O power supply terminals** | IOG: 2 A max./terminal | IOG (A3 and B3): 2 A max./terminal<br>IOG (A7 and B7): 0.5 A max./terminal |
| **NX Unit power consumption** | • Connected to a CPU Unit or a Communication Control Unit 1.05 W max.<br>• Connected to a Communications Coupler Unit 0.70 W max. | • Connected to a CPU Unit or a Communication Control Unit 1.10 W max.<br>• Connected to a Communications Coupler Unit 0.75 W max. |
| **Current consumption from I/O power supply** | 40 mA max. | 60 mA max. |
| **Weight** | 65 g max. | |
| **Circuit layout** | 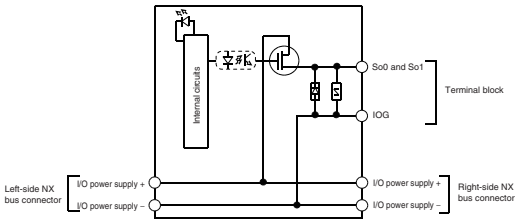 | 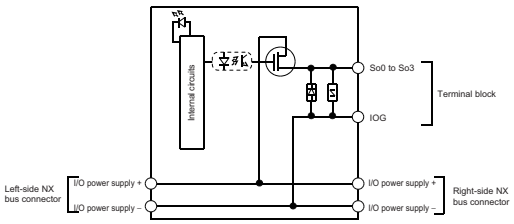 |
| **Terminal connection diagram** | So0 and So1: Safety output terminals<br>IOG: I/O power supply 0 V<br> 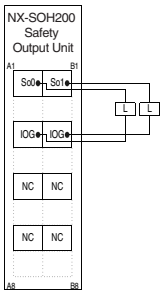 <br>Refer to User's manual (Cat.No.Z930) for details. | So0 to So3: Safety output terminals<br>IOG: I/O power supply 0 V<br> 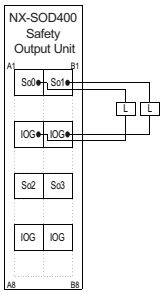 <br>Refer to User's manual (Cat.No.Z930) for details. |

| Unit name | Safety Output Unit | |
|---|---|---|
| **Model** | NX- SOH200 | NX-SOD400 |
| **Installation orientation and restrictions** | Installation orientation:<br>• Connected to a CPU Unit or a Communication Control Unit<br>Possible in the upright installation orientation.<br>• Connected to a Communications Coupler Unit<br>6 possible orientations<br>Restrictions: For upright installation, the ambient temperature is restricted as shown below depending on the total Unit load current.<br> 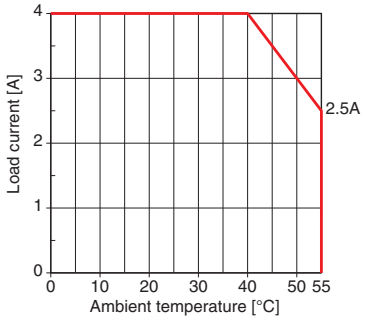 <br><br>For all installation orientations other than upright installation, the ambient temperature is restricted as shown below according to the total Unit load current.<br> 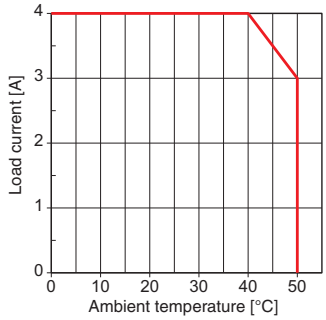 <br> | Installation orientation:<br>• Connected to a CPU Unit or a Communication Control Unit<br>Possible in the upright installation orientation.<br>• Connected to a Communications Coupler Unit<br>6 possible orientations<br>Restrictions: None |
| **Protective functions** | Overvoltage protection circuit and short detection | |

# Function Specifications

| Item | | | Function |
|---|---|---|---|
| Setting Parameters | Safety I/O Settings | | You make a setting for safety process data communications and connection with safety I/O devices. |
| | | Safety Process Data Communications Settings | You select Safety I/O Units to perform safety process data communications (FSoE communications) and make necessary settings. |
| | | Safety Device Allocation Settings | You set the connection between Safety I/O Units and safety devices. |
| | EtherNet/IP Safety Connection Settings ✱1 | | You can register target devices of EtherNet/IP Safety network and configure the connection settings. |
| | Standard I/O Settings | Exposed Variable Settings | You set whether to expose global variables of the Safety CPU Unit. The values of exposed variables can be referenced from NJ/NX-series CPU Units and NY-series Industrial PCs. |
| | | Standard Process Data Communications ✱2 | You set the devices and ports of the Standard I/O Units for the exposed variables of the Safety CPU Unit. |
| | Safety Task Settings | | You define the execution cycle and timing of the safety task and programs to be executed in the task. |
| | | Assigning Programs | You assign safety programs to execute to the task. |
| | I/O Map Settings | | The ports of Safety I/O Units used in safety process data communications are displayed. You assign device variables used in safety programs to the I/O ports. |
| Creating Safety Programs | Instruction List (Toolbox) | | A hierarchy of the functions and function blocks that you can use is displayed in the Toolbox. You can drag the required functions and function blocks onto the FBD editor to insert it to a safety program. |
| | FBD Programming | | You connect variables, functions, and function blocks with connecting lines to build networks. The FBD editor is used to enter them. |
| | | Adding FBD Networks | You create FBD networks on the FBD editor to create algorithms. |
| | | Inserting and Deleting Functions and Function blocks | You insert and delete functions and function blocks on the FBD editor. |
| | | Entry Assistance | When you enter functions, function blocks, or parameters, each character that you enter from the keyboard narrows the list of candidates that is displayed for selection. |
| | | Commenting Out FBD Networks | You can comment out each FBD network. When a network is commented out, it is no longer executed. |
| | | Converting Programs into Function Blocks ✱1 | You can convert the safety program into user-defined function block. |
| | Automatic Programming ✱1 | | A safety programs can be automatically generated from input and output signals and expected values of the program. |
| | Creating Variables | | You create variables used in safety programs in the global or local variable table. |
| | User-defined Function Blocks | | You create user-defined function blocks. |
| | | Help Reference ✱3 | You can display the user-defined function block help with the popup menu or shortcut key. |
| | Export/Import | | POUs can be exported and imported. |
| | | Programs ✱4 | You can export/import POUs. |
| | | User-defined Function Blocks ✱3 | You can export/import user-defined function blocks. |
| | Searching and Replacing | | You can search for and replace strings in the variable tables, programs, and function blocks of a Safety CPU Unit. |
| Debugging | Monitoring | | Variables are monitored during safety program execution. You can monitor the present values of device variables assigned to Safety I/O Units and user-defined variables. The values can be monitored on the FBD editor or Watch Tab Page. |
| | Changing the Present Values of Variables | | You can change the present values of user-defined variables and device variables as required. You can do this on the FBD editor or Watch Tab Page. |
| | Forced Refreshing | | The inputs from external devices and outputs to external devices are refreshed with a specified value on the Sysmac Studio. The specified value is retained even if the value of the variable is overwritten from the user program.<br>You can use forced refreshing on the FBD editor or Watch Tab Page. |
| | Offline Debugging ✱5 | | You can check if the control program logic works as designed in advance using a special debugging function for the Simulator without connecting online with the Safety CPU Unit. |
| | | Initial Value Settings ✱6 | You can set the initial values of variables when you start execution of simulation. |
| | | Feedback Settings ✱6 | You can set input status that is linked to changes in output status when simulator is running. |
| | | Simple Automatic Test ✱7 | You can check that expected values of the outputs to the inputs of the program are designed as intended using the Simulator functions of the Safety CPU Unit. |
| | User Memory Usage Monitor ✱6 | | The memory usage of the safety control system and usage of safety network such as I/O data size are displayed. |
| Debugging | Online Functional Test ✱1 | | This function helps you to check the safety functional operation of the safety system.<br>You can produce output device operation relative to the input and check whether the system operates as expected. It is possible to output the check results. |
| Safety | Safety Validation | | You append the "safety-validated" information to a safety program when you can ensure safety of the program after you complete debugging. |
| | Changing Operating Mode | | There are four operating modes; PROGRAM mode, DEBUG mode (STOPPED), DEBUG mode (RUN), and RUN mode. The RUN mode can be selected only for the validated safety programs. |
| Maintenance | Generating Safety Data Logging Settings File ✱1 | | Settings to use the safety data logging function can be generated as a file. |
| | Generating Safety Unit Restore File ✱1 | | A file of safety program and settings to be transferred to the Safety CPU Unit using an SD memory card is generated for Safety Unit Restore function. |

| Item | | | Function |
|---|---|---|---|
| Security Measures | Prevention of Incorrect Connections | Setting the Node Name | You set a unique name for each Safety CPU Unit to confirm that you operate the correct Safety CPU Unit. |
| | Prevention of Incorrect Operation | Safety Password | You can prevent unauthorized access to safety functions of Safety CPU Units by setting a safety password for online operations that affect the safety functions. |
| | Prevention of Theft of Assets | Data Protection (Programs) ✻4 | You can set passwords for individual programs to prohibit displaying or changing them. |
| | | Data Protection (User-defined Function Blocks) ✻3 | You can set passwords for individual user-defined function blocks to prohibit displaying or changing them. |

**Note:** Supported only by the Sysmac Studio version 1.07 or higher.
**✻1.** Supported only by the Sysmac Studio version 1.24 or higher.
**✻2.** Supported if the EtherNet/IP Coupler is selected with Sysmac Studio version 1.11 or higher.
**✻3.** Supported only by the Sysmac Studio version 1.12 or higher.
**✻4.** Supported only by the Sysmac Studio version 1.17 or higher.
**✻5.** Supported only by the Sysmac Studio version 1.08 or higher.
**✻6.** Supported only by the Sysmac Studio version 1.10 or higher.
**✻7.** Supported only by the Sysmac Studio version 1.15 or higher.

Refer to the *SYSMAC-SE□□□ Datasheet* (www.ia.omron.com/) for function specifications of the Safety Control Unit.

# Version Information

- Relationship between Unit Versions and Sysmac Studio Versions

## EtherCAT Slave Terminal and EtherNet/IP Slave Terminal

- This configuration is used to connect the Safety Control Unit to the EtherCAT Coupler Units, and the EtherCAT Slave Terminal to the built-in EtherCAT master of the CPU Unit via EtherCAT.
- This configuration is used to connect the Safety Control Units to the EtherNet/IP Coupler Units.

| NX Unit | | Corresponding version ✻1 | | | | |
|---|---|---|---|---|---|---|
| Model number | Unit version | EtherCAT Coupler Unit NX-ECC20□ | NJ/NX-series CPU Units ✻2 | Sysmac Studio | ErherNet/IP Coupler Unit (NX-EIC202) | Sysmac Studio |
| NX-SL3300 | 1.0 | 1.1 or later | 1.06 or later | 1.07 or later | --- | --- |
| | 1.1 | | | 1.10 or later | 1.0 or later | 1.10 or later |
| NX-SL3500 | 1.0 | 1.2 or later | 1.07 or later | 1.08 or later | --- | --- |
| | 1.1 | | | 1.10 or later | --- | --- |
| NX-SIH400 | 1.0 | 1.1 or later | 1.06 or later | 1.07 or later | --- | --- |
| | 1.1 | | | 1.10 or later | 1.0 or later | 1.10 or later |
| NX-SID800 | 1.0 | | | 1.07 or later | | |
| NX-SOH200 | | | | | | |
| NX-SOD400 | | | | | | |

✻1 Some Units do not have all of the versions given in the above table.
If a Unit does not have the specified version, support is provided by the oldest available version after the specified version.
Refer to the user's manuals for the specific Units for the relation between models and versions.
✻2 These Units cannot be mounted to Machine Automation Controllers with NX1P CPU Units. Mount and use an EtherCAT Coupler Unit instead.

## CPU Rack

- This configuration is used to connect the Safety Control Units to the CPU Units.

| Safety Control Unit model and version | | NX bus master: CPU Unit | |
|---|---|---|---|
| Model | Unit version | NX102 CPU Units | Sysmac Studio |
| NX-SL3300 | Ver. 1.0 | Ver. 1.30 | Ver. 1.22 |
| | Ver. 1.1 | | |
| NX-SL3500 | Ver. 1.0 | | |
| | Ver. 1.1 | | |
| NX-SL5500 | Ver. 1.3 | Ver. 1.31 | Ver. 1.24 |
| NX-SL5700 | Ver. 1.2 | --- | --- |
| | Ver. 1.3 | Ver. 1.31 | Ver. 1.24 |
| NX-SIH400 | Ver. 1.0 | Ver. 1.30 | Ver. 1.22 |
| | Ver. 1.1 | | |
| NX-SID800 | Ver. 1.0 | | |
| NX-SOH200 | | | |
| NX-SOD400 | | | |

# External Interface

## Safety CPU Unit

**NX-SL3300/SL3500**

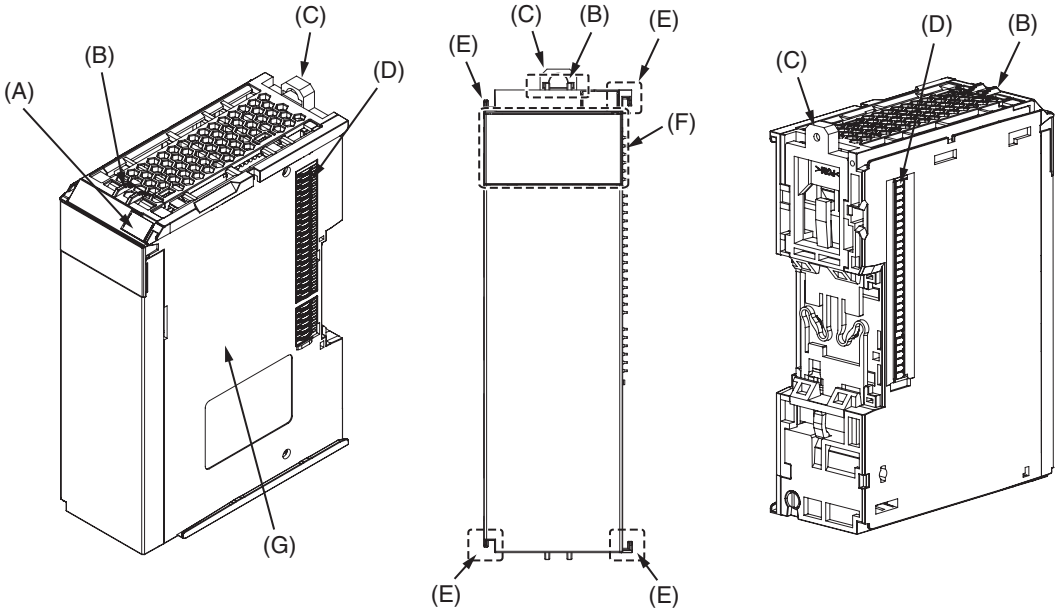


| Letter | Item | Specification |
|---|---|---|
| (A) | Marker attachment locations | The locations where markers are attached. The markers made by OMRON are installed for the factory setting. Commercially available markers can also be installed. |
| (B) | Protrusions for removing the Unit | The protrusions to hold when removing the Unit. |
| (C) | DIN Track mounting hooks | These hooks are used to mount the NX Unit to a DIN Track. |
| (D) | NX bus connector | This is the NX-series bus connector. It is used to connect an NX-series Safety I/O Unit or other NX Unit. |
| (E) | Unit hookup guides | These guides are used to connect two Units. |
| (F) | Indicators | The indicators show the current operating status of the NX Unit or signal I/O status. |
| (G) | Unit specifications | The specifications of the NX Unit are given here. |

**Safety Input Unit NX-SIH400/SID800**
**Safety Output Unit NX-SOH200/SOD400**

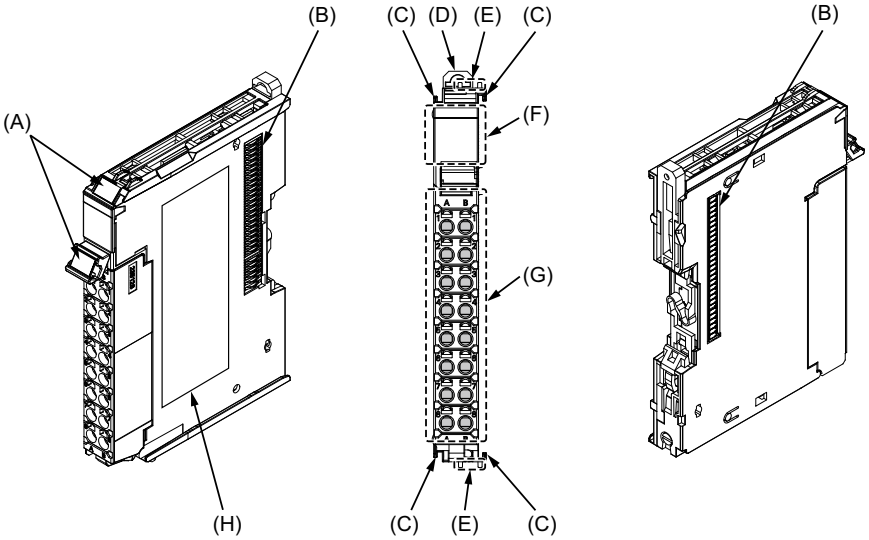


| Letter | Item | Specification |
|---|---|---|
| (A) | Marker attachment locations | The locations where markers are attached. The markers made by OMRON are installed for the factory setting. Commercially available markers can also be installed. |
| (B) | NX bus connector | This is the NX-series bus connector. Connect this connector to another Unit, such as the NX-series Safety CPU Unit or a Safety I/O Unit. |
| (C) | Unit hookup guides | These guides are used to connect two Units. |
| (D) | DIN Track mounting hooks | These hooks are used to mount the NX Unit to a DIN Track. |
| (E) | Protrusions for removing the Unit | The protrusions to hold when removing the Unit. |
| (F) | Indicators | The indicators show the current operating status of the NX Unit or signal I/O status. |
| (G) | Terminal block | The terminal block is used to connect to external devices. It connects the safety outputs. The number of terminals depends on the NX Unit. |
| (H) | Unit specifications | The specifications of the NX Unit are given here. |

## Terminal Blocks

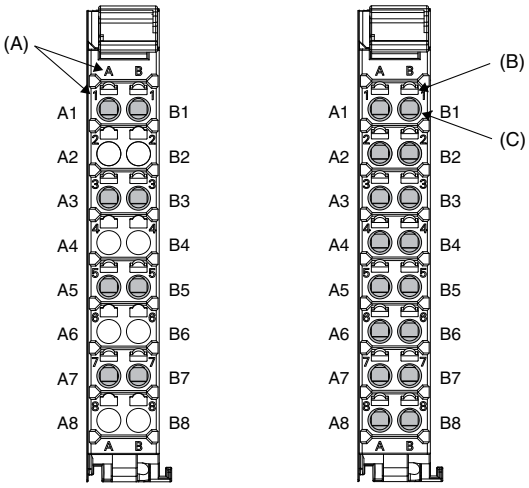


8-terminal type 16-terminal type

| Letter | Item | Specification |
|---|---|---|
| (A) | Terminal number indications | The terminal numbers are given by column letters A and B, and row numbers 1 to 8. The combination of the column and row gives the terminal numbers from A1 to A8 and B1 to B8. The terminal number indicators are the same regardless of the number of terminals on the terminal block, as shown above. |
| (B) | Release holes | Insert a flat-blade screwdriver into these holes to connect and remove the wires. |
| (C) | Terminal holes | The wires are inserted into these holes. |

## Applicable Terminal Blocks for Each Unit Model

| Unit model number | Terminal Blocks | | | | |
|---|---|---|---|---|---|
| | Model | No. of terminals | Terminal number indications | Ground terminal mark | Terminal current capacity |
| NX-SIH400 | NX-TBA082 | 8 | A/B | None | 10A |
| NX-SID800 | NX-TBA162 | 16 | A/B | None | 10A |
| NX-SOH200 | NX-TBA082 | 8 | A/B | None | 10A |
| NX-SOD400 | NX-TBA082 | 8 | A/B | None | 10A |

## Applicable Wires

### Using Ferrules

If you use ferrules, attach the twisted wires to them.
Observe the application instructions for your ferrules for the wire stripping length when attaching ferrules.
Always use plated one-pin ferrules. Do not use unplated ferrules or two-pin ferrules.

The applicable ferrules, wires, and crimping tool are given in the following table.

| Terminal types | Manufacturer | Ferrule model number | Applicable wire ($mm^2$ (AWG)) | Crimping tool |
|---|---|---|---|---|
| Terminals other than ground terminals | Phoenix Contact | AI0,34-8 | 0.34 (#22) | Phoenix Contact (The figure in parentheses is the applicable wire size.) CRIMPFOX 6 (0.25 to 6 $mm^2$, AWG24 to 10) |
| | | AI0,5-8 | 0.5 (#20) | |
| | | AI0,5-10 | | |
| | | AI0,75-8 | 0.75 (#18) | |
| | | AI0,75-10 | | |
| | | AI1,0-8 | 1.0 (#18) | |
| | | AI1,0-10 | | |
| | | AI1,5-8 | 1.5 (#16) | |
| | | AI1,5-10 | | |
| Ground terminals | | AI2,5-10 | 2.0 ✻ | |
| Terminals other than ground terminals | Weidmuller | H0.14/12 | 0.14 (#26) | Weidmuller (The figure in parentheses is the applicable wire size.) PZ6 Roto (0.14 to 6 $mm^2$, AWG 26 to 10) |
| | | H0.25/12 | 0.25 (#24) | |
| | | H0.34/12 | 0.34 (#22) | |
| | | H0.5/14 | 0.5 (#20) | |
| | | H0.5/16 | | |
| | | H0.75/14 | 0.75 (#18) | |
| | | H0.75/16 | | |
| | | H1.0/14 | 1.0 (#18) | |
| | | H1.0/16 | | |
| | | H1.5/14 | 1.5 (#16) | |
| | | H1.5/16 | | |

✻ Some AWG 14 wires exceed 2.0 $mm^2$ and cannot be used in the screwless clamping terminal block.

When you use any ferrules other than those in the above table, crimp them to the twisted wires so that the following processed dimensions are achieved.

Finished Dimensions of Ferrules

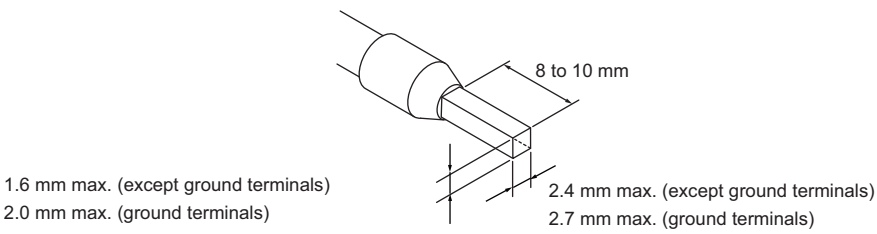

### Using Twisted Wires/Solid Wires

If you use the twisted wires or the solid wires, use the following table to determine the correct wire specifications.

<table>
<tr><th colspan="2" rowspan="3">Terminals</th><th colspan="4">Wire type</th><th rowspan="3">Wire size</th><th rowspan="3">Conductor length (stripping length)</th></tr>
<tr><th colspan="2">Twisted wires</th><th colspan="2">Solid wire</th></tr>
<tr><th>Classification</th><th>Current capacity</th><th>Plated</th><th>Unplated</th><th>Plated</th><th>Unplated</th></tr>
<tr><td rowspan="3">All terminals except ground terminals</td><td>2 A max.</td><td rowspan="2">Possible</td><td>Possible</td><td>Possible</td><td>Possible</td><td rowspan="3">0.08 to 1.5 mm$^2$<br>AWG28 to 16</td><td rowspan="3">8 to 10 mm</td></tr>
<tr><td>Greater than 2 A and 4 A or less</td><td rowspan="2">Not Possible</td><td>Possible ✻1</td><td rowspan="2">Not Possible</td></tr>
<tr><td>Greater than 4 A</td><td>Possible ✻1</td><td>Not Possible</td></tr>
<tr><td>Ground terminals</td><td>---</td><td>Possible</td><td>Possible</td><td>Possible ✻2</td><td>Possible ✻2</td><td>2.0 mm$^2$</td><td>9 to 10 mm</td></tr>
</table>

**✻1** Secure wires to the screwless clamping terminal block. Refer to the *Securing Wires* in the USER'S MANUAL for how to secure wires.
**✻2** With the NX-TB□□□1 Terminal Block, use twisted wires to connect the ground terminal. Do not use a solid wire.

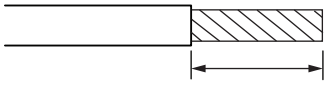

Conductor length (stripping length)

**<Additional Information>** If more than 2 A will flow on the wires, use plated wires or use ferrules.

## Dimensions

(Unit/mm)

**Safety CPU Unit NX-SL3300/SL3500**

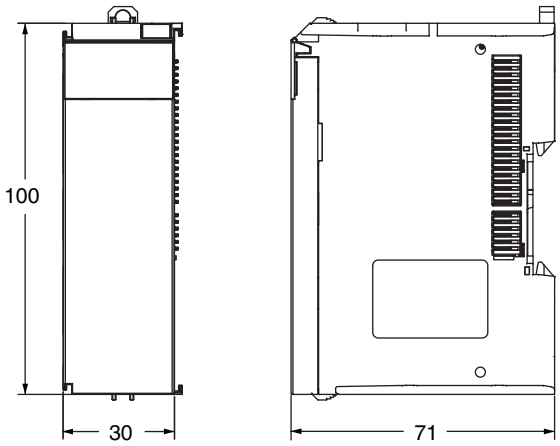


**Safety Input Units NX-SIH400/SID800**
**Safety Output Units NX-SOH200/SOD400**

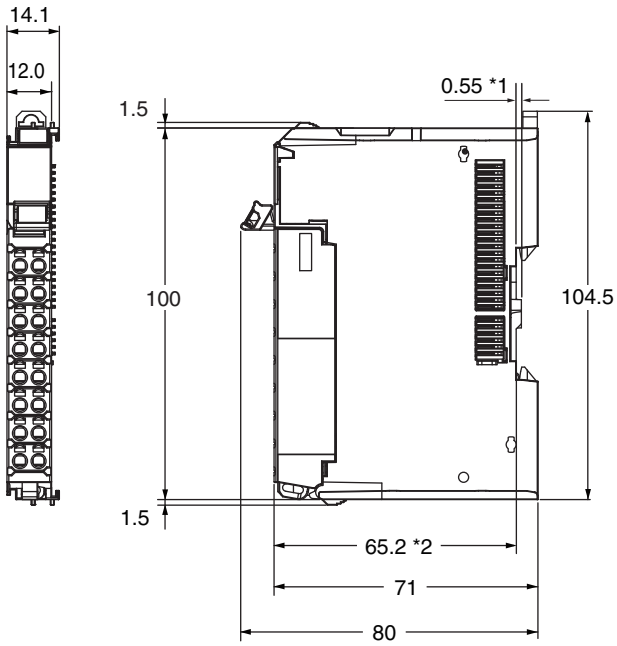


**✻1** The dimension is 1.35 mm for Units with lot numbers through December 2014.
**✻2** The dimension from the attachment surface of the DIN Track to the front surface of the Safety I/O Unit.

## Related Manuals

| Cat. No. | Model number | Manual name | Application | Description |
|---|---|---|---|---|
| Z930 | NX-SL□□□□<br>NX-SI□□□□<br>NX-SO□□□□ | NX-series<br>Safety Control Unit<br>User's Manual | Learning how to use NX-series Safety Control Units. | Describes the hardware, setup methods, and functions of the NX-series Safety Control Units. |
| Z931 | NX-SL□□□□ | NX-series<br>Safety Control Unit<br>Instructions<br>Reference Manual | Learning about the specifications of instructions for the Safety CPU Unit. | Describes the instructions for the Safety CPU Unit. When programming, use this manual together with the *NX-series Safety Control Units User's Manual* (Cat. No. Z930). |
| W504 | SYSMAC-SE2□□□ | Sysmac Studio Version 1<br>Operation Manual | Learning about the operating procedures and functions of the Sysmac Studio. | Describes the operating procedures of the Sysmac Studio. |
| W519 | NX-ECC□□□ | NX-series<br>EtherCAT®<br>Coupler Unit<br>User's Manual | Learning how to use the NX-series EtherCAT Coupler Unit and EtherCAT Slave Terminals. | The following items are described: the overall system and configuration methods of an EtherCAT Slave Terminal (which consists of an NX-series EtherCAT Coupler Unit and NX Units), and information on hardware, setup, and functions to set up, control, and monitor NX Units through EtherCAT. |
| W536 | NX-EIC□□□ | NX-series<br>Ether-Net/IP™<br>Coupler Unit<br>User's Manual | NX-EIC□□□ Learning how to use an NX-series EtherNet/IP Coupler Unit and EtherNet/IP Slave Terminals | The following items are described: the overall system and configuration methods of an EtherNet/IP Slave Terminal (which consists of an NX-series EtherNet/IP Coupler Unit and NX Units), and information on hardware, setup, and functions to set up, control, and monitor NX Units through EtherNet/IP. |

## Terms and Conditions Agreement

Read and understand this catalog.
Please read and understand this catalog before purchasing the products. Please consult your OMRON representative if you have any questions or comments.

Warranties.
(a) Exclusive Warranty. Omron's exclusive warranty is that the Products will be free from defects in materials and workmanship for a period of twelve months from the date of sale by Omron (or such other period expressed in writing by Omron). Omron disclaims all other warranties, express or implied.
(b) Limitations. OMRON MAKES NO WARRANTY OR REPRESENTATION, EXPRESS OR IMPLIED, ABOUT NON-INFRINGEMENT, MERCHANTABILITY OR FITNESS FOR A PARTICULAR PURPOSE OF THE PRODUCTS. BUYER ACKNOWLEDGES THAT IT ALONE HAS DETERMINED THAT THE
PRODUCTS WILL SUITABLY MEET THE REQUIREMENTS OF THEIR INTENDED USE.
Omron further disclaims all warranties and responsibility of any type for claims or expenses based on infringement by the Products or otherwise of any intellectual property right. (c) Buyer Remedy. Omron's sole obligation hereunder shall be, at Omron's election, to (i) replace (in the form originally shipped with Buyer responsible for labor charges for removal or replacement thereof) the non-complying Product, (ii) repair the non-complying Product, or (iii) repay or credit Buyer an amount equal to the purchase price of the non-complying Product; provided that in no event shall Omron be responsible for warranty, repair, indemnity or any other claims or expenses regarding the Products unless Omron's analysis confirms that the Products were properly handled, stored, installed and maintained and not subject to contamination, abuse, misuse or inappropriate modification. Return of any Products by Buyer must be approved in writing by Omron before shipment. Omron Companies shall not be liable for the suitability or unsuitability or the results from the use of Products in combination with any electrical or electronic components, circuits, system assemblies or any other materials or substances or environments. Any advice, recommendations or information given orally or in writing, are not to be construed as an amendment or addition to the above warranty.
See http://www.omron.com/global/ or contact your Omron representative for published information.

Limitation on Liability; Etc.
OMRON COMPANIES SHALL NOT BE LIABLE FOR SPECIAL, INDIRECT, INCIDENTAL, OR CONSEQUENTIAL DAMAGES, LOSS OF PROFITS OR PRODUCTION OR COMMERCIAL LOSS IN ANY WAY CONNECTED WITH THE PRODUCTS, WHETHER SUCH CLAIM IS BASED IN CONTRACT, WARRANTY, NEGLIGENCE OR STRICT LIABILITY.
Further, in no event shall liability of Omron Companies exceed the individual price of the Product on which liability is asserted.

Suitability of Use.
Omron Companies shall not be responsible for conformity with any standards, codes or regulations which apply to the combination of the Product in the Buyer's application or use of the Product. At Buyer's request, Omron will provide applicable third party certification documents identifying ratings and limitations of use which apply to the Product. This information by itself is not sufficient for a complete determination of the suitability of the Product in combination with the end product, machine, system, or other application or use. Buyer shall be solely responsible for determining appropriateness of the particular Product with respect to Buyer's application, product or system. Buyer shall take application responsibility in all cases.
NEVER USE THE PRODUCT FOR AN APPLICATION INVOLVING SERIOUS RISK TO LIFE OR PROPERTY OR IN LARGE QUANTITIES WITHOUT ENSURING THAT THE SYSTEM AS A WHOLE HAS BEEN DESIGNED TO ADDRESS THE RISKS, AND THAT THE OMRON PRODUCT(S) IS PROPERLY RATED AND INSTALLED FOR THE INTENDED USE WITHIN THE OVERALL EQUIPMENT OR SYSTEM.

Programmable Products.
Omron Companies shall not be responsible for the user's programming of a programmable Product, or any consequence thereof.

Performance Data.
Data presented in Omron Company websites, catalogs and other materials is provided as a guide for the user in determining suitability and does not constitute a warranty. It may represent the result of Omron's test conditions, and the user must correlate it to actual application requirements. Actual performance is subject to the Omron's Warranty and Limitations of Liability.

Change in Specifications.
Product specifications and accessories may be changed at any time based on improvements and other reasons. It is our practice to change part numbers when published ratings or features are changed, or when significant construction changes are made. However, some specifications of the Product may be changed without any notice. When in doubt, special part numbers may be assigned to fix or establish key specifications for your application. Please consult with your Omron's representative at any time to confirm actual specifications of purchased Product.

Errors and Omissions.
Information presented by Omron Companies has been checked and is believed to be accurate; however, no responsibility is assumed for clerical, typographical or proofreading errors or omissions.

2019.7

**In the interest of product improvement, specifications are subject to change without notice.**

**OMRON Corporation**
**Industrial Automation Company**

**http://www.ia.omron.com/**