NOTES:

1. MATERIALS OF CONSTRUCTION:
   BODY, BARREL = BRASS (QQ-B-626), GOLD PLATED.
   CONTACT PIN = BERYLLIUM COPPER, GOLD PLATED.
   FERRULE = COPPER, GOLD PLATED.
   INSULATORS = PTFE MIL-P-19468.
2. DO NOT SCALE THIS DRAWING.
3. UNLESS OTHERWISE SPECIFIED, ALL DIMENSIONS ARE AFTER PLATING.

919-131J-51SX	REVISIONS				
DRAWING NO.	REV	DESCRIPTION	DATE	ECO	APPR
THIRD ANGLE PROJ.	A	RELEASE TO MFG.	7/29/99	43080	CPM/

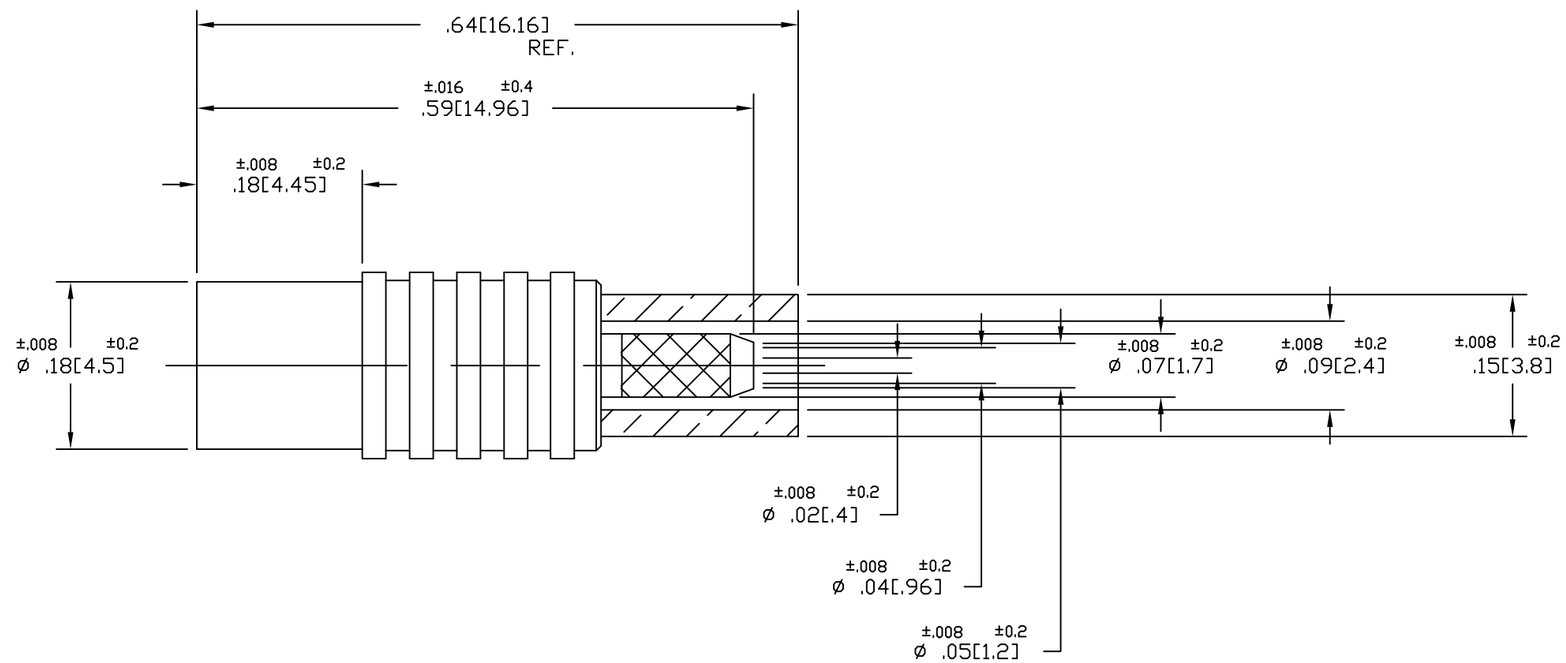

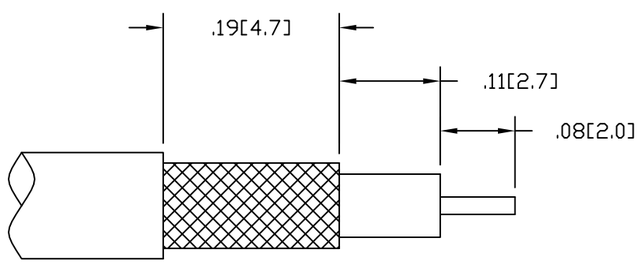

RECOMMENDED CABLE
STRIPPING DIM'S

CUSTOMER OUTLINE DRAWING

UNLESS OTHERWISE SPECIFIED, DIMENSIONS ARE IN INCHES AND TOLERANCES ARE:

2 PLACE DECIMAL	3 PLACE DECIMAL	ANGLES
±.015 (0,381 mm)	±.005 (0,127 mm)	± 1°

NOTICE – These drawings, specifications, or other data (1) are, and remain the property of Amphenol Corp. (2) must be returned upon request; and (3) are confidential and not to be disclosed to any person other than those to whom they are given by Amphenol Corp. The furnishing of these drawings, specifications, or other data by Amphenol Corp., or to any other person to anyone for any purpose is not to be regarded by implication or otherwise in any manner licensing, granting rights or permitting such holder or any other person to manufacture, use or sell any product, process or design, patented or otherwise, that may in any way be related to or disclosed by said drawings, specifications, or other data.

MATERIAL

REFERENCE
EAR 967292-0

DRAWN	C. McGRATH	DATE 7/19/99
ENGINEER	T. AUBIN	DATE 7/19/99
APPROVED	T. AUBIN	DATE 7/28/99

TITLE
MCX CRIMP JACK

Amphenol
Amphenol Corporation
RF/Microwave Operations
Danbury, Conn. U.S.A. 06810

SCALE: 6:1 | SHEET 2 OF 2

CAD FILE	CODE ID	DWG SIZE	DRAWING NO.	REV
H:\PETE\MCX\919\ASSY\131J\51SX000C	74868	B	919-131J-51SX	A