Number of contacts

160

Male connectors, angled, SMC compatible

Identification	Number of contacts	Contact arrangement	Part No. Performance levels according to IEC 61 076-4-113 Explanation chapter 00 2	1
Male connector* without retention clip	160	z, a, b, c, d	02 01 160 2101	02 01 160 1101 02 01 160 1105[2)]
with retention clip	160	z, a, b, c, d	02 01 160 2102	02 01 160 1102 02 01 160 1106[2)]

Dimensions

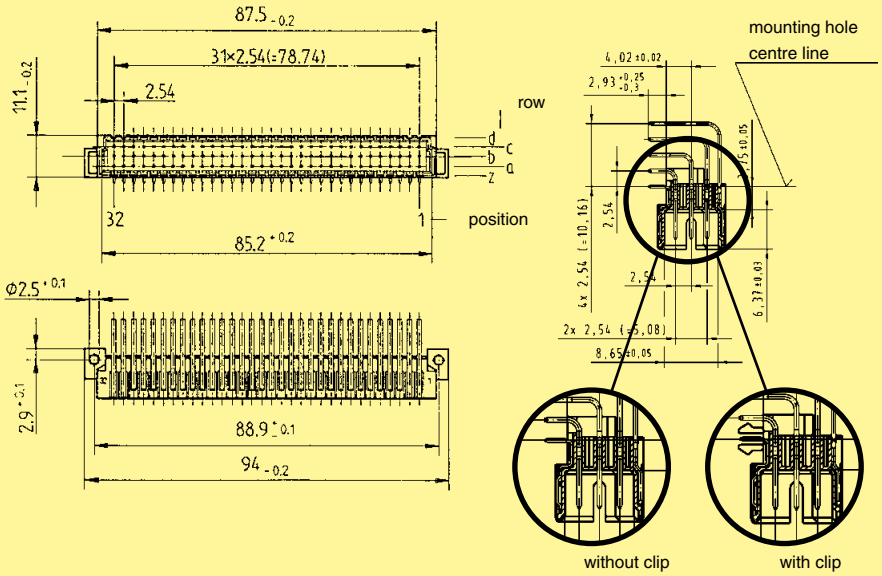

Board drillings

Mounting side

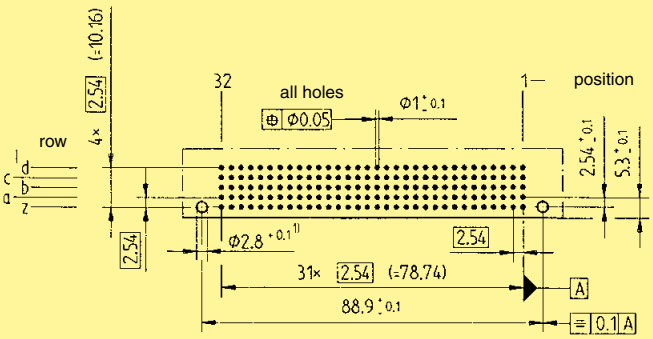

Cross section of solder terminations

Row z:
A = 0.21 - 0.25 mm²

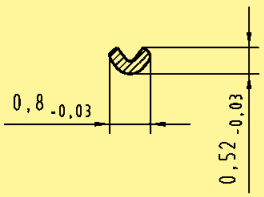

Rows a, b, c:
A = 0.25 - 0.33 mm²

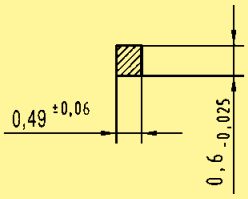

Row d:
A = 0.29 - 0.32 mm²

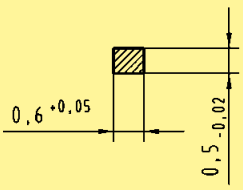

A = cross area of contacts

Dimensions in mm

* Pre-leading contacts at positions d1, d2, d31 and d32
1) Recommendation for variants with clip: Drillings can be enlarged up to 3.1 mm ø to reduce standard mounting force (see chapter 00)
2) Special variant with min. 1.27 µm (50 µinch) Au and SnPb on termination