DC INDUCTIVE PROXIMITY SENSORS

Q8	Q8	Q8
●	●	●
2 mm	2 mm	2 mm
Nickel plated brass	Nickel plated brass	Nickel plated brass
●	●	●
10-30VDC	10-30VDC	10-30VDC
<10%	<10%	<10%
<10mA	<10mA	<10mA
200mA	200mA	200mA
<0.01mA	<0.01mA	<0.01mA
<2.0V	<20V	<2.0V
2KHZ	2KHZ	2KHZ
0.1ms/0.1ms	0.1ms/0.1ms	0.1ms/0.1ms
<15%(Sr)	<15%(Sr)	<15%(Sr)
<1.0%(Sr)	<1.0%(Sr)	<1.0%(Sr)
IP67	IP67	IP67
-25°C - +70°C	-25°C - +70°C	-25°C - +70°C
<10%(Sr)	<10%(Sr)	<10%(Sr)
YES	YES	YES
220mA	220mA	220mA
POM	POM	POM
P1S1B8802NO3A2 1	**P1S1B8802NO3S2** 1	**P1S1B8802NOPA3** 25
P1S1B8802NC3A2 2	**P1S1B8802NC3S2** 2	**P1S1B8802NCPA3** 25
P1S1B8802PO3A2 3	**P1S1B8802PO3S2** 3	**P1S1B8802POPA3** 26
P1S1B8802PC3A2 4	**P1S1B8802PC3S2** 4	**P1S1B8802PCPA3** 26
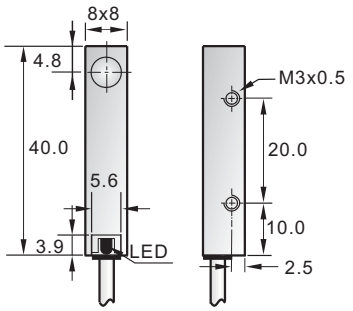	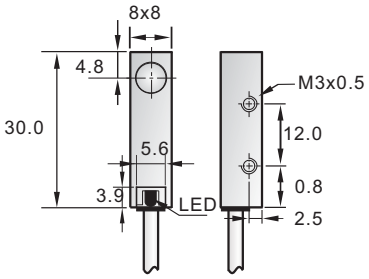	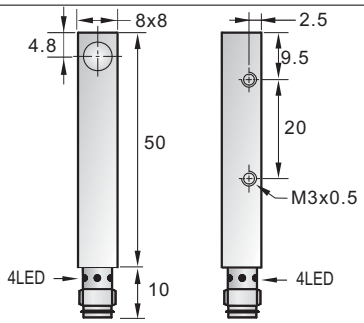
3 ϕ 3x0.15	3 ϕ 3x0.15	
Approx.38 g	Approx.38 g	Approx.38 g