Alle Rechte vorbehalten/ *All rights reserved*

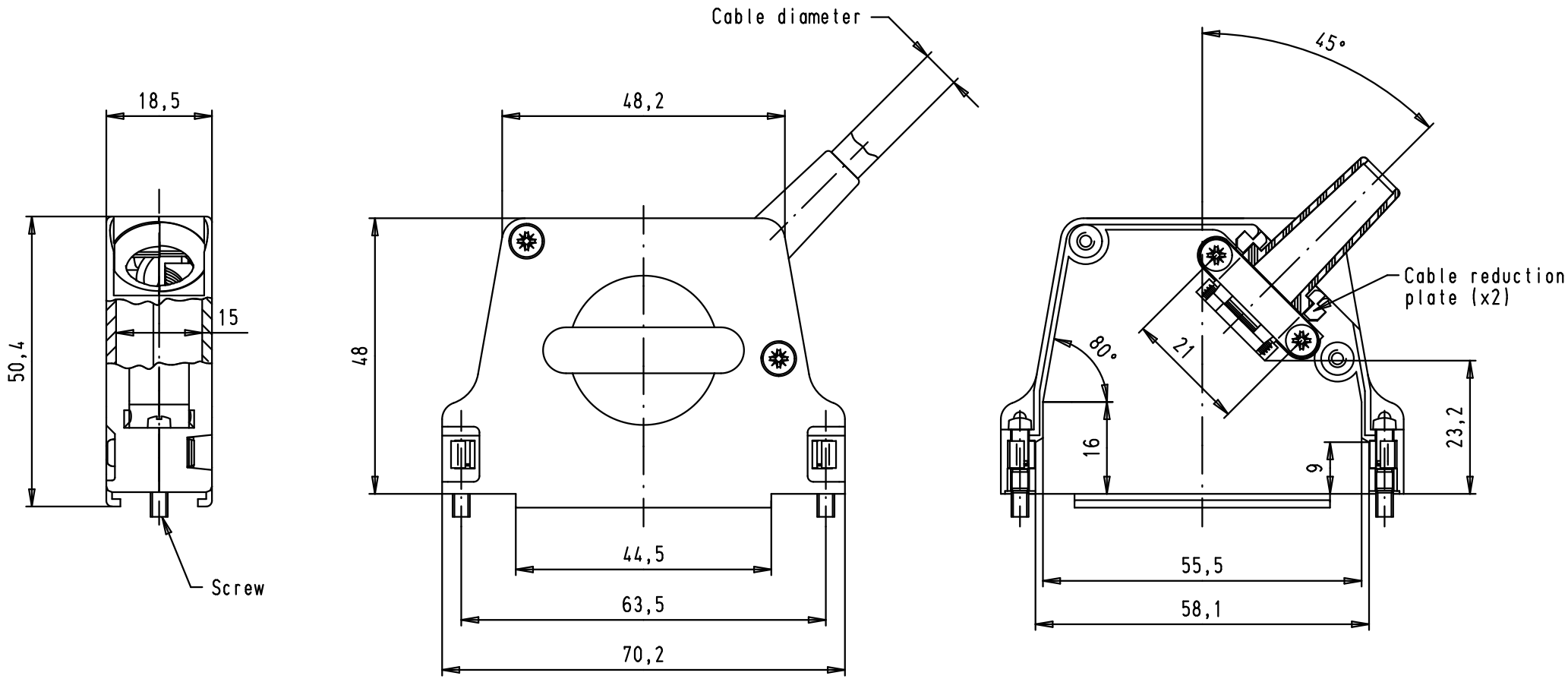

Minimum cable diameter: 3
Maximum cable diameter:
- with rubber bushing: 9
- without rubber bushing: 12
- without reduction plate: 15

Part number	Screw thread
09 67 037 0335	M3
09 67 037 0334	4-40 UNC

Mod.	Dat.	Name
EC00368	07/07/09	PK
33112	28/09/05	JMDR
32329	15/11/04	TR

	Dat.	Name
Detail.	15/11/04	TR
Insp.		
Stand.		

All Dim. in mm
Orig. Size DIN A 4

HARTING EURL
F-95972 Paris

D-Sub, 37 poles, side entry, right angled metal hood with short screw

Maßstab/ *Scale* 1:1

TB 09 67 037 033X

Sub.

Blatt/ *Page* 2/3