3610KL (92□ x 25L)

NMB-MAT

EMINEBEA.COM

DC Axial Fans

General Specifications

Motor Protection:
Auto Restart/Polarity Protection

Insulation Resistance: 10M Ω or over with a DC500V Megger

Dielectric Withstand Voltage: AC 700V 1s

Allowable Ambient Temperature Range:

B60 Class:	-10°C ~ +50°C (Operating)
B10~B50 Class:	-10°C ~ +70°C (Operating)
All Class:	-40°C ~ +70°C (Storage)

(non-condensing environment)

Expected Life

Failure Rate: 10%

25°C	100,000 Hours (B00, E00)
25°C	70,000 Hours (G00,D00)
25°C	60,000 Hours (C00, F00)

Characteristic Curves

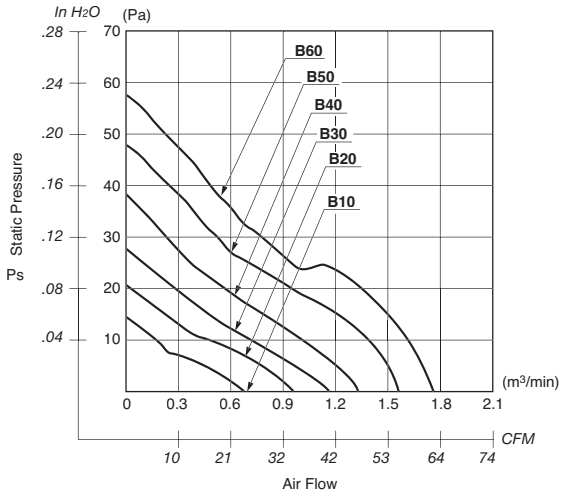

Outline

Units: inch (mm)

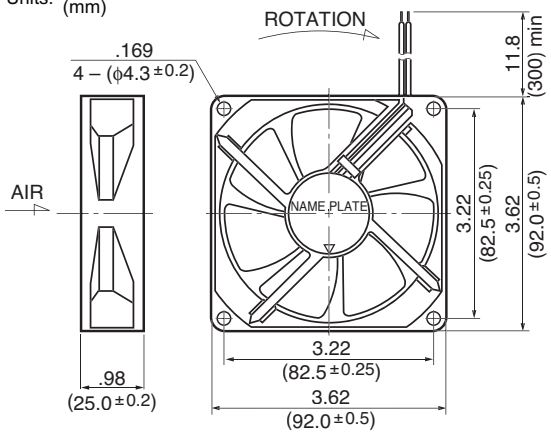

Panel Cut-outs

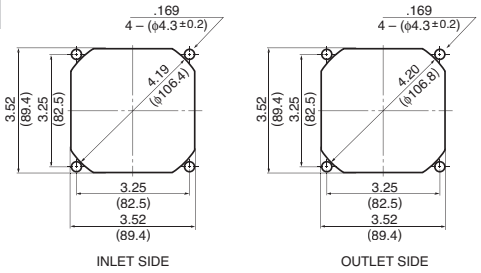

Material

Casing	: Plastic (Black) 94V-0
Impeller	: Plastic (Black) 94V-0
Bearing	: Ball Bearing
Lead Wire	: UL1007, AWG24, +Red, -Black

Specifications

MODEL	Product No.	Rated Voltage (V)	Operating Voltage (V)	Current (A)*1	Input Power (W)*1	Speed (min-1)*1	Max. Air Flow CFM*1	Max. Air Flow (m3/min)*1	Max. Static Pressure in H2O	Max. Static Pressure (Pa)*1	Noise (dB)*1	Mass (g)
3610KL-04W-**B10**-	X00	12	6.0 ~ 13.8	0.073	0.876	1750	26.5	0.75	.06	14.2	25.0	95
3610KL-04W-**B20**-	X00	12	6.0 ~ 13.8	0.110	1.320	2100	33.5	0.95	.08	20.1	29.5	95
3610KL-04W-**B30**-	X00	12	6.0 ~ 13.8	0.160	1.920	2450	40.6	1.15	.11	27.0	34.0	95
3610KL-04W-**B40**-	X00	12	6.0 ~ 13.8	0.220	2.640	2850	47.6	1.35	.15	37.2	37.5	95
3610KL-04W-**B50**-	X00	12	6.0 ~ 13.0	0.315	3.780	3200	54.7	1.55	.19	48.0	41.0	95
3610KL-04W-**B60**-	X00	12	6.0 ~ 12.6	0.430	5.160	3600	61.8	1.75	.23	57.2	44.5	95
3610KL-05W-**B10**-	X00	24	10.0 ~ 27.6	0.05	1.20	1750	26.5	0.75	.06	14.2	25.0	95
3610KL-05W-**B20**-	X00	24	10.0 ~ 27.6	0.06	1.44	2100	33.5	0.95	.08	20.1	29.5	95
3610KL-05W-**B30**-	X00	24	10.0 ~ 27.6	0.09	2.16	2450	40.6	1.15	.11	27.0	34.0	95
3610KL-05W-**B40**-	X00	24	10.0 ~ 27.6	0.12	2.88	2850	47.6	1.35	.15	37.2	37.5	95
3610KL-05W-**B50**-	X00	24	10.0 ~ 25.0	0.16	3.84	3200	54.7	1.55	.19	48.0	41.0	95
3610KL-05W-**B60**-	X00	24	10.0 ~ 25.0	0.20	4.80	3600	61.8	1.75	.23	57.2	44.5	95

Rotation: Clockwise Airflow Outlet: Air Out Over Struts *1: Average Values in Free Air