RoHS Barrier Network Fuse 242 Series

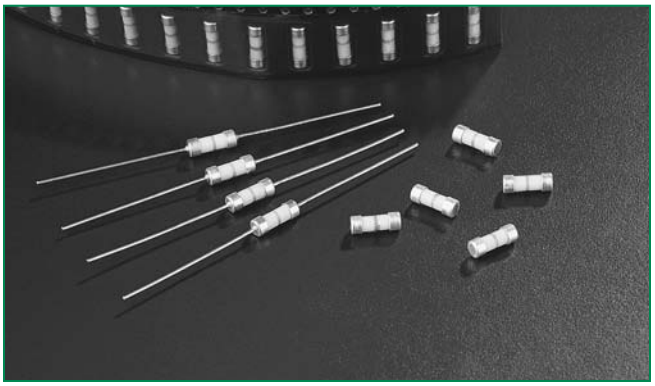

Description

The 242 Series hazardous area barrier network fuse offers a range of fuses designed to enable greater safety operating electronic equipment within potentially explosive environments.

Features

- Meets Barrier Network Standards (EN50020) for hazardous applications.
- High interrupting rating. Meets the 1500A minimum.
- Available in both axial lead and surface mount.

Applications

- Type i protected electrical equipment; Electrical connections and components, Test equipment

Agency Approvals

Agency	Agency File Number	Ampere Range
	Recognized under the components program of Underwriters Laboratories (JDYX2-10480)	0.050 - 0.250 A

Electrical Characteristics

% of Ampere Rating	Opening Time
100%	4 hours, Minimum
300%	10 seconds, Maximum
1000%	0.002 seconds, Maximum

Electrical Characteristics

Ampere Rating (A)	Amp Code	Body Color Coding	Interrupting Rating	Nominal Cold Resistance (Ohms)	Nominal Melting I^2t (A^2 Sec.)	Agency Approvals
0.050	.050	Red	4000A @ 250VAC/VDC	11.34	0.000103	x
0.080	.080	Green		8.19	0.000214	x
0.100	.100	Blue		3.60	0.000977	x
0.160	.160	Violet		3.00	0.00157	x
0.200	.200	Brown		2.68	0.0038	x
0.250	.250	Black		1.6	0.00579	x

Average Time Current Curves

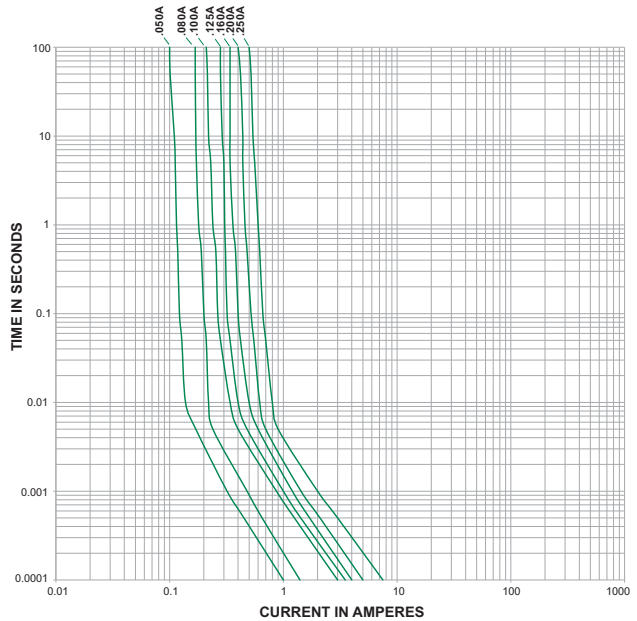

Dimensions

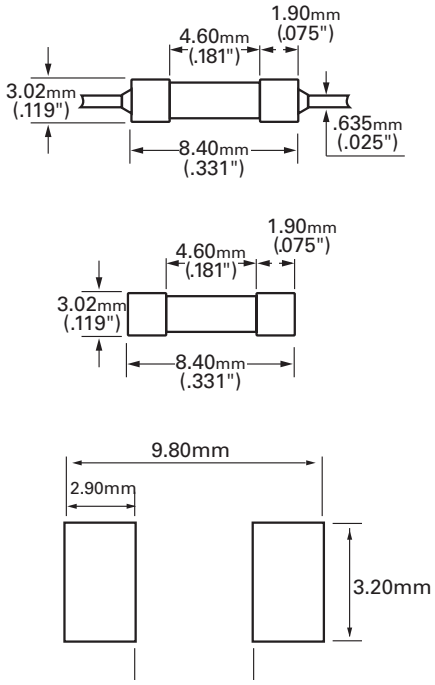

Soldering Parameters

Reflow Condition		Pb – Free assembly
Pre Heat	- Temperature Min ($T_{s(min)}$)	150°C
	- Temperature Max ($T_{s(max)}$)	200°C
	- Time (min to max) (t_s)	60 – 180 secs
Average ramp up rate (Liquidus Temp (T_L) to peak		5°C/second max
$T_{S(max)}$ to T_L - Ramp-up Rate		5°C/second max
Reflow	- Temperature (T_L) (Liquidus)	217°C
	- Temperature (t_L)	60 – 150 seconds
Peak Temperature (T_P)		$250^{+0/-5}$ °C
Time within 5°C of actual peak Temp. (t_p)		20 – 40 seconds
Ramp-down Rate		5°C/second max
Time 25°C to peak Temperature (T_P)		8 minutes Max.
Do not exceed		260°C

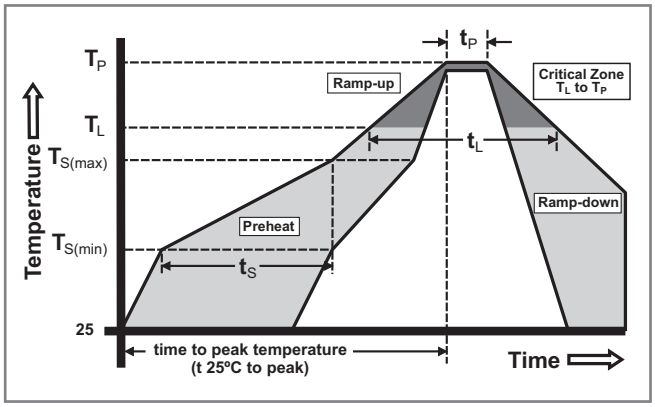

Wave Soldering	260°C, 10 seconds max.

Product Characteristics

Operating Temperature	–40°C to 125°C.
Thermal Shock	Withstands 5 cycles of – 55°C to 125°C
Vibration	Per MIL-STD-202F
Insulation Resistance (After Opening)	Greater than 10,000 ohms.

Part Numbering System

0242.050UAT1

SERIES

AMP CODE

Refer to Amp Code column in the Electrical Specifications table.

QUANTITY & PACKAGING CODE

HAT1 = 100 pcs, Axial Leaded, Ammo Pack T1 Tape
UAT1 = 500 pcs, Axial Leaded, Ammo Pack T1 Tape
UR = 500 pcs, Surface Mount, Tape & Reel