Photocouplers GaAℓAs Infrared LED & Photo IC

TLP2367

1. Applications

- Factory Networking
- High-Speed Digital Interfacing for Instrumentation and Control Devices
- I/O Interface Boards

2. General

The TLP2367 is 50-Mbps high speed photocoupler in small SO6 package.

The TLP2367 consists of high-output GaAℓAs light-emitting diode coupled with integrated high gain, high speed photodetector, and has high speed switching performance at operation temperature from -40 ℃ to 125 ℃ and at supply voltage from 2.7 V to 5.5 V.

The detector has a totem-pole output stage with current sourcing and sinking capabilities. The TLP2367 has an internal Faraday shield that provides a guaranteed common-mode transient immunity of ±25 kV/μs.

3. Features

(1) Package: SO6

(2) Data transfer rate: 50 MBd (typ.) (NRZ)

(3) Threshold input current: 4.0 mA (max)

(4) Supply voltage: 2.7 to 5.5 V

(5) Operating temperature: -40 to 125 ℃

(6) Propagation delay time: 20 ns (max)

(7) Pulse width distortion: 8 ns (max)

(8) Isolation voltage: 3750 Vrms (min)

(9) Safety standards

UL-approved: UL1577, File No.E67349

cUL-approved: CSA Component Acceptance Service No.5A File No.E67349

VDE-approved: EN60747-5-5, EN60065 or EN60950-1 **(Note 1)**

CQC-approved: GB4943.1, GB8898 Japan Factory

仅适用于海拔 2000m 以下地区安全使用

Note 1: When an EN60747-5-5 approved type is needed, please designate the **Option (V4)**.

Start of commercial production

2016-05

©2016-2017
Toshiba Electronic Devices & Storage Corporation

4. Packaging and Pin Assignment

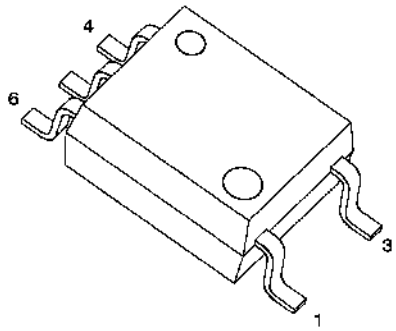

11-4L1S

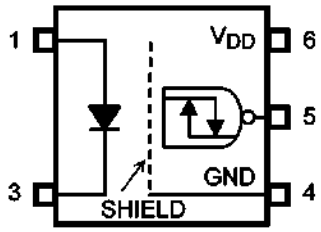

1: Anode
3: Cathode
4: GND
5: V_O (Output)
6: V_{DD}

5. Internal Circuit (Note)

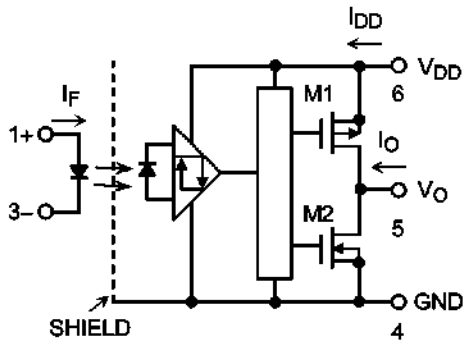

Note: A 0.1-μF bypass capacitor must be connected between pin 6 and pin 4.

6. Principle of Operation

6.1. Truth Table

Input	LED	Output
H	ON	L
L	OFF	H

6.2. Mechanical Parameters

Characteristics	Dimension(Min)	Unit
Creepage distances	5.0	mm
Clearance distances	5.0	
Internal isolation thickness	0.4	

©2016-2017
Toshiba Electronic Devices & Storage Corporation

7. Absolute Maximum Ratings (Note) (Unless otherwise specified, T_a = 25 °C)

	Characteristics		Symbol	Note	Rating	Unit
LED	Input forward current		I_F		15	mA
	Input forward current derating	($T_a \geq$ 110 °C)	$\Delta I_F/\Delta T_a$		-0.33	mA/°C
	Input forward current (pulsed)		I_{FP}	(Note 1)	30	mA
	Input forward current derating (pulsed)	($T_a \geq$ 110 °C)	$\Delta I_{FP}/\Delta T_a$		-0.66	mA/°C
	Peak transient input forward current		I_{FPT}	(Note 2)	1	A
	Peak transient input forward current derating	($T_a \geq$ 110 °C)	$\Delta I_{FPT}/\Delta T_a$		-40	mA/°C
	Input power dissipation		P_D		20	mW
	Input power dissipation derating	($T_a \geq$ 110 °C)	$\Delta P_D/\Delta T_a$		-0.8	mW/°C
	Input reverse voltage		V_R		5	V
Detector	Output current		I_O		10	mA
	Output voltage		V_O		6	V
	Supply voltage		V_{DD}		6	V
	Output power dissipation		P_O		20	mW
	Output power dissipation derating	($T_a \geq$ 110 °C)	$\Delta P_O/\Delta T_a$		-0.8	mW/°C
Common	Operating temperature		T_{opr}		-40 to 125	°C
	Storage temperature		T_{stg}		-55 to 125	°C
	Lead soldering temperature	(10 s)	T_{sol}		260	°C
	Isolation voltage	(AC, 60 s, R.H. ≤ 60 %)	BV_S	(Note 3)	3750	Vrms

Note: Using continuously under heavy loads (e.g. the application of high temperature/current/voltage and the significant change in temperature, etc.) may cause this product to decrease in the reliability significantly even if the operating conditions (i.e. operating temperature/current/voltage, etc.) are within the absolute maximum ratings.
Please design the appropriate reliability upon reviewing the Toshiba Semiconductor Reliability Handbook ("Handling Precautions"/"Derating Concept and Methods") and individual reliability data (i.e. reliability test report and estimated failure rate, etc).

Note 1: Pulse width (PW) ≤ 1 ms, duty = 50 %

Note 2: Pulse width (PW) ≤ 1 μs, 300 pps

Note 3: This device is considered as a two-terminal device: Pins 1 and 3 are shorted together, and pins 4, 5 and 6 are shorted together.

8. Recommended Operating Conditions (Note)

Characteristics	Symbol	Note	Min	Typ.	Max	Unit
Input on-state current	$I_{F(ON)}$	(Note 1)	5.5	—	10	mA
Input off-state voltage	$V_{F(OFF)}$	(Note 1)	0	—	0.8	V
Supply voltage	V_{DD}	(Note 2)	2.7	3.3 / 5	5.5	V
Operating temperature	T_{opr}	(Note 2)	-40	—	125	°C

Note: The recommended operating conditions are given as a design guide necessary to obtain the intended performance of the device. Each parameter is an independent value. When creating a system design using this device, the electrical characteristics specified in this data sheet should also be considered.

Note: A ceramic capacitor (0.1 μF) should be connected between pin 6 and pin 4 to stabilize the operation of a high-gain linear amplifier. Otherwise, this photocoupler may not switch properly. The bypass capacitor should be placed within 1 cm of each pin.

Note 1: The rise and fall times of the input on-current should be less than 0.5 μs.

Note 2: Denotes the operating range, not the recommended operating condition.

©2016-2017
Toshiba Electronic Devices & Storage Corporation

9. Electrical Characteristics (Note) (Unless otherwise specified, T_a = -40 to 125 °C, V_{DD} = 2.7 to 5.5 V)

Characteristics	Symbol	Test Circuit	Test Condition	Min	Typ.	Max	Unit
Input forward voltage	V_F		I_F = 5.5 mA	1.2	—	2.1	V
			I_F = 5.5 mA, T_a = 25 °C	1.3	1.6	1.9	
Input forward voltage temperature coefficient	$\Delta V_F/\Delta T_a$		I_F = 5.5 mA	—	-1.58	—	mV/°C
Input reverse current	I_R		V_R = 5 V, T_a = 25 °C	—	—	10	μA
Input capacitance	C_t		V = 0 V, f = 1 MHz , T_a = 25 °C	—	26	—	pF
Low-level output voltage	V_{OL}	Fig. 12.1.1	I_O = 20 μA, I_F = 5.5 mA	—	0.002	0.1	V
			I_O = 3.2 mA, I_F = 5.5 mA	—	0.1	0.4	
High-level output voltage	V_{OH}	Fig. 12.1.2	I_O = -20 μA, V_F = 0.8 V	V_{DD} - 0.1	V_{DD} - 0.01	—	
			I_O = -3.2 mA, V_F = 0.8 V	V_{DD} - 1.0	V_{DD} - 0.2	—	
Low-level supply current	I_{DDL}	Fig. 12.1.3	I_F = 5.5 mA	—	1.6	2.5	mA
High-level supply current	I_{DDH}	Fig. 12.1.4	I_F = 0 mA	—	1.7	2.5	
Threshold input current (H/L)	I_{FHL}		I_O = 3.2 mA, V_O < 0.4 V	—	1.7	4	

Note: All typical values are at V_{DD} = 5 V, T_a = 25 °C, unless otherwise noted

10. Isolation Characteristics (Unless otherwise specified, T_a = 25 °C)

Characteristics	Symbol	Note	Test Condition	Min	Typ.	Max	Unit
Total capacitance (input to output)	C_S	(Note 1)	V_S = 0 V, f = 1 MHz	—	0.8	—	pF
Isolation resistance	R_S	(Note 1)	V_S = 500 V, R.H. ≤ 60 %	1×10^{12}	1×10^{14}	—	Ω
Isolation voltage	BV_S	(Note 1)	AC, 60 s	3750	—	—	Vrms
			AC, 1 s, in oil	—	10000	—	
			DC, 60 s, in oil	—	10000	—	Vdc

Note 1: This device is considered as a two-terminal device: Pins 1 and 3 are shorted together, and pins 4, 5 and 6 are shorted together.

©2016-2017
Toshiba Electronic Devices & Storage Corporation

11. Switching Characteristics (Note)
(Unless otherwise specified, T_a = -40 to 125 °C, V_{DD} = 2.7 to 5.5 V)

Characteristics	Symbol	Note	Test Circuit	Test Condition	Min	Typ.	Max	Unit
Propagation delay time (H/L)	t_{pHL}	(Note 1)	Fig. 12.1.5	V_{IN} = 3.3 V, R_{IN} = 300 Ω, C_{IN} = 47 pF	—	11	20	ns
Propagation delay time (L/H)	t_{pLH}				—	10	20	
Pulse width distortion	$\|t_{pHL}-t_{pLH}\|$				—	1	8	
Propagation delay skew (device to device)	t_{psk}	(Note 1), (Note 2)			-10	—	10	
Propagation delay time (H/L)	t_{pHL}	(Note 1)		V_{IN} = 5 V, R_{IN} = 620 Ω, C_{IN} = 22 pF	—	10	20	
Propagation delay time (L/H)	t_{pLH}				—	11	20	
Pulse width distortion	$\|t_{pHL}-t_{pLH}\|$				—	1	8	
Propagation delay skew (device to device)	t_{psk}	(Note 1), (Note 2)			-10	—	10	
Rise time	t_r	(Note 1)		V_{IN} = 3.3 → 0 V, R_{IN} = 300 Ω, C_{IN} = 47 pF	—	2	—	ns
Fall time	t_f			V_{IN} = 0 → 3.3 V, R_{IN} = 300 Ω, C_{IN} = 47 pF	—	1	—	
Common-mode transient immunity at output high	CM_H		Fig. 12.1.6	I_F = 5.5 mA, R_{IN} = 300 Ω / 620 Ω, C_{IN} = 47 pF / 22 pF V_{CM} = 1000 V_{p-p}, T_a = 25 °C	±25	±50	—	kV/μs
Common-mode transient immunity at output low	CM_L				±25	±50		

Note: All typical values are at V_{DD} = 5 V, T_a = 25 °C, unless otherwise noted.

Note 1: f = 10 MHz, duty = 50 %, input current $t_r = t_f$ = 5 ns, C_L is approximately 15 pF which includes probe and stray wiring capacitance.

Note 2: The propagation delay skew, t_{psk}, is equal to the magnitude of the worst-case difference in t_{pHL} and/or t_{pLH} that will be seen between units at the same given conditions (supply voltage, input current, temperature, etc).

©2016-2017
Toshiba Electronic Devices & Storage Corporation

12. Test Circuits and Characteristics Curves

12.1. Test Circuits

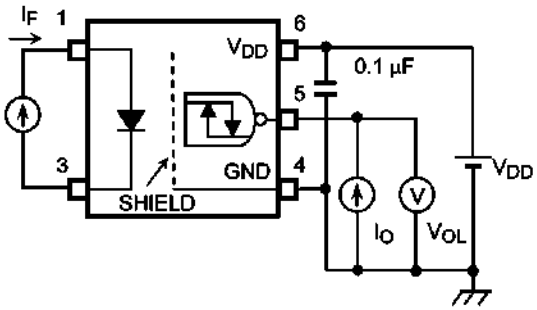

Fig. 12.1.1 V_{OL} Test Circuit

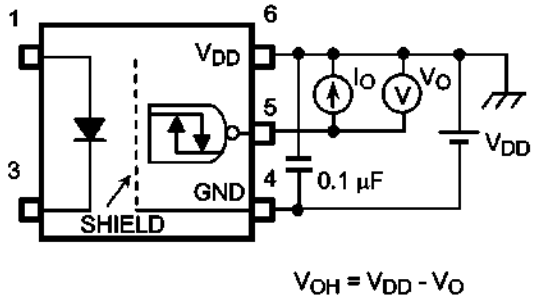

Fig. 12.1.2 V_{OH} Test Circuit

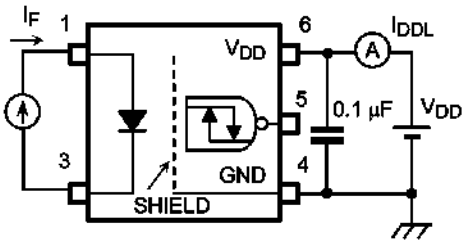

Fig. 12.1.3 I_{DDL} Test Circuit

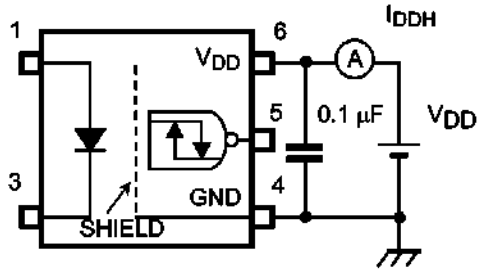

Fig. 12.1.4 I_{DDH} Test Circuit

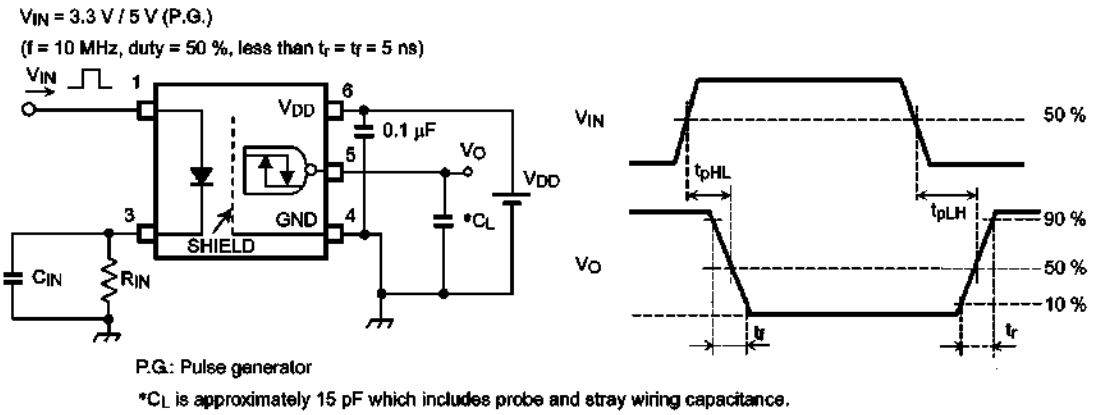

Fig. 12.1.5 Switching Time Test Circuit and Waveform

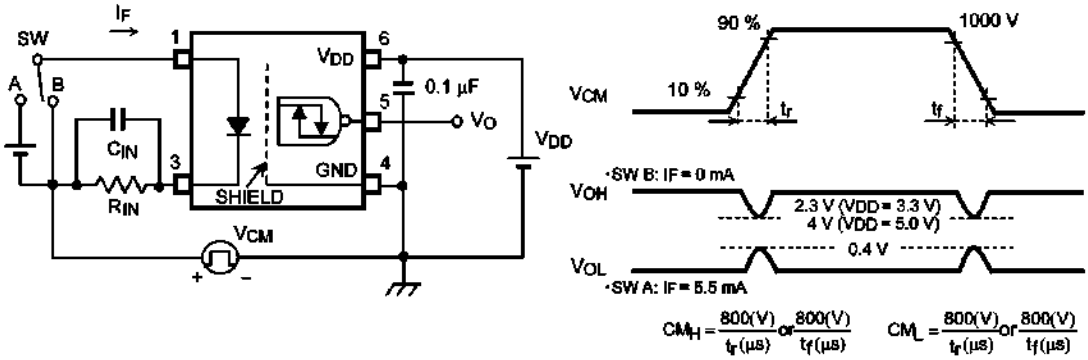

Fig. 12.1.6 Common-Mode Transient Immunity Test Circuit and Waveform

12.2. Characteristics Curves (Note)

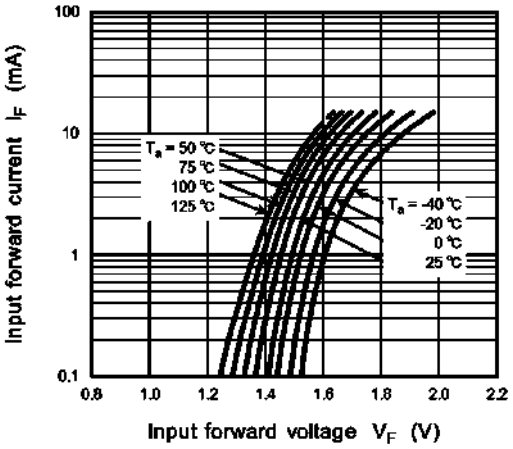

Fig. 12.2.1 I_F - V_F

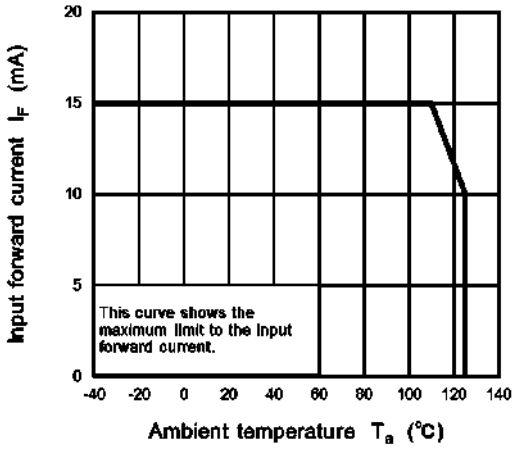

Fig. 12.2.2 I_F - T_a

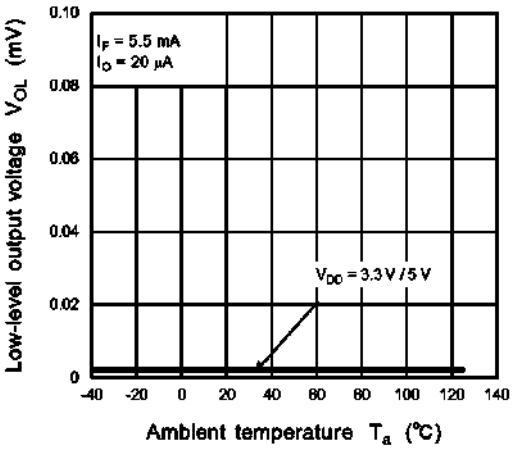

Fig. 12.2.3 V_{OL} - T_a

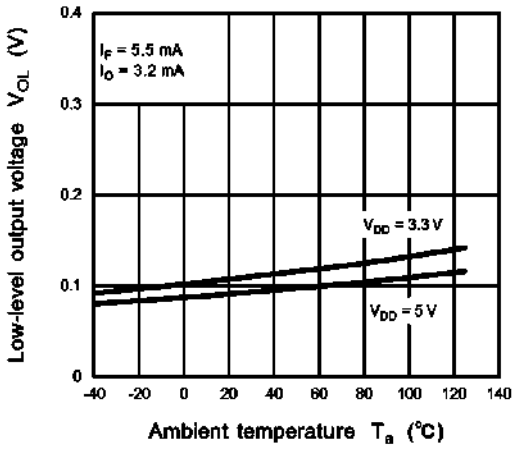

Fig. 12.2.4 V_{OL} - T_a

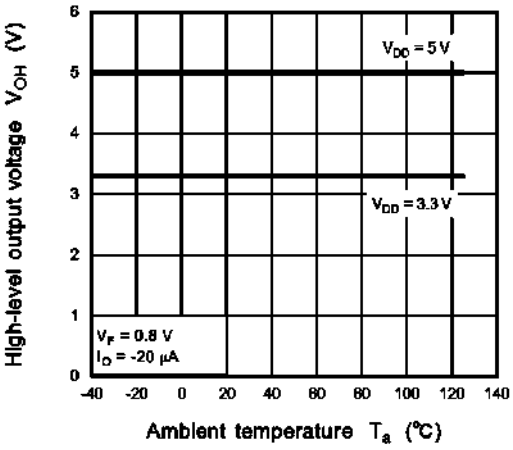

Fig. 12.2.5 V_{OH} - T_a

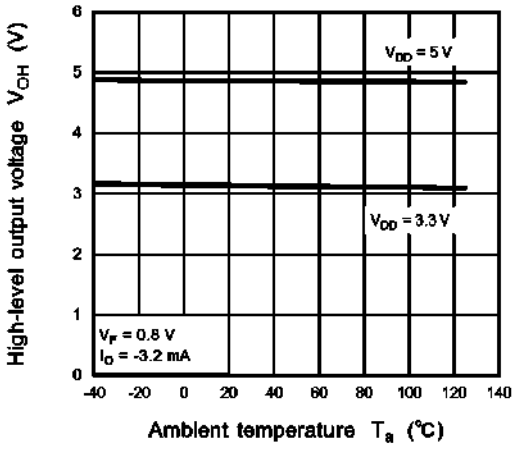

Fig. 12.2.6 V_{OH} - T_a

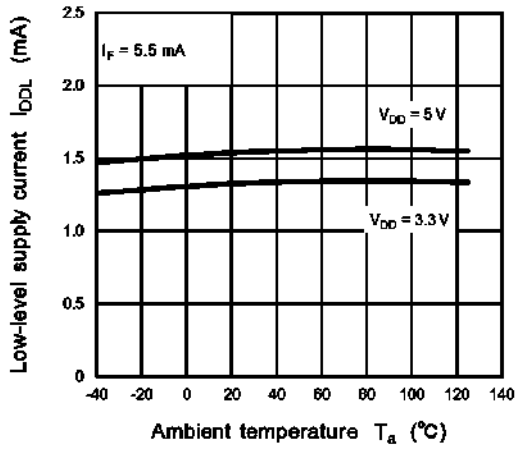

Fig. 12.2.7 I_{DDL} - T_a

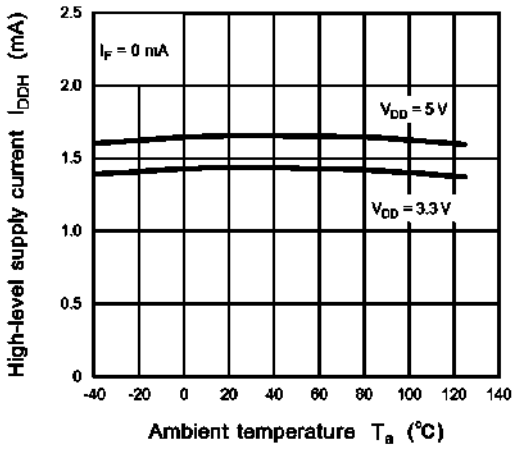

Fig. 12.2.8 I_{DDH} - T_a

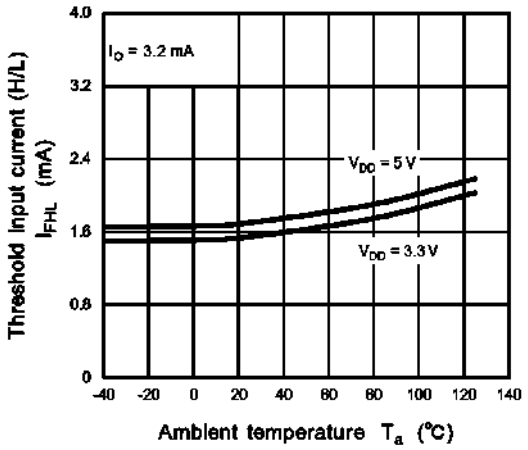

Fig. 12.2.9 I_{FHL} - T_a

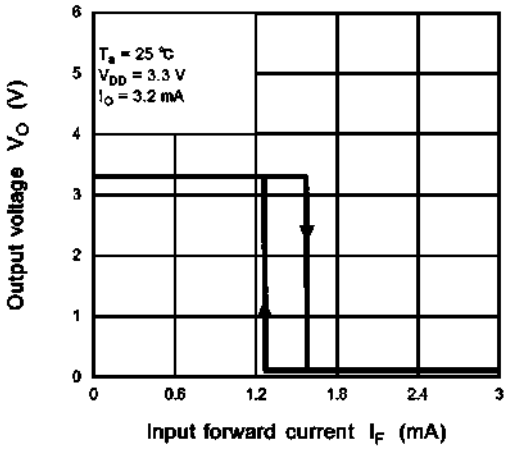

Fig. 12.2.10 V_O - I_F

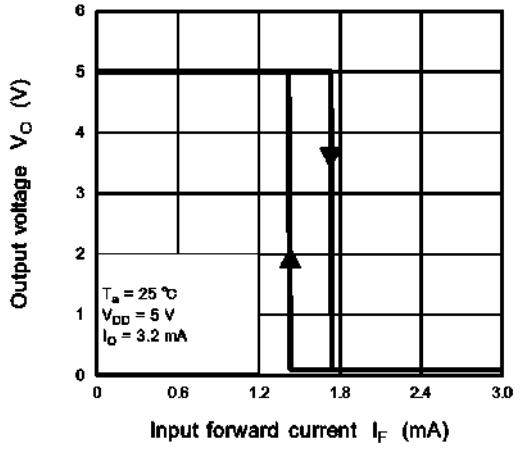

Fig. 12.2.11 V_O - I_F

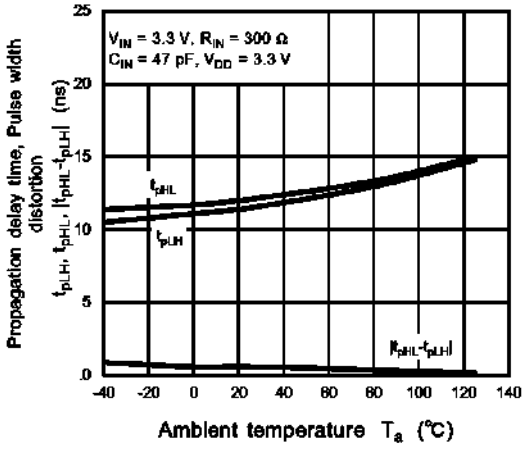

Fig. 12.2.12 t_{pHL}, t_{pLH}, $|t_{pHL} - t_{pLH}|$ - T_a

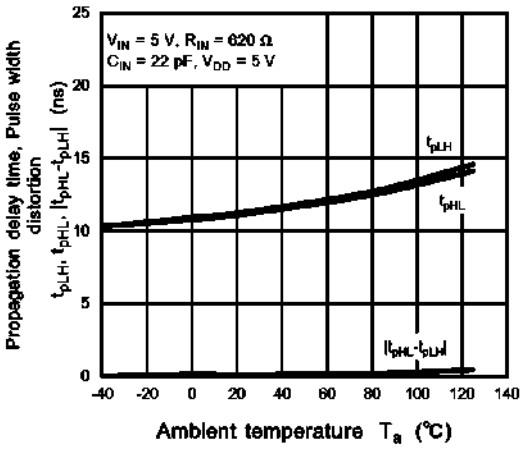

Fig. 12.2.13 t_{pHL}, t_{pLH}, $|t_{pHL} - t_{pLH}|$ - T_a

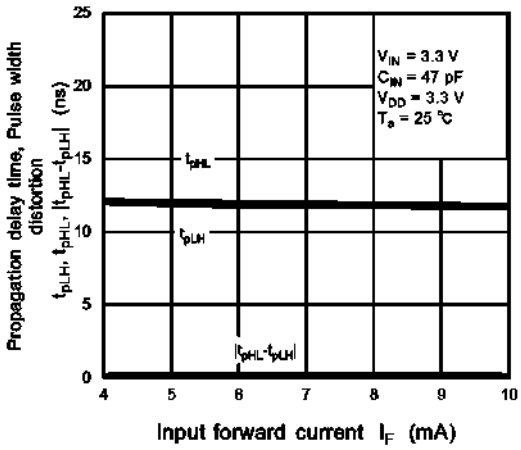

Fig. 12.2.14 t_{pHL}, t_{pLH}, $|t_{pHL} - t_{pLH}|$ - I_F

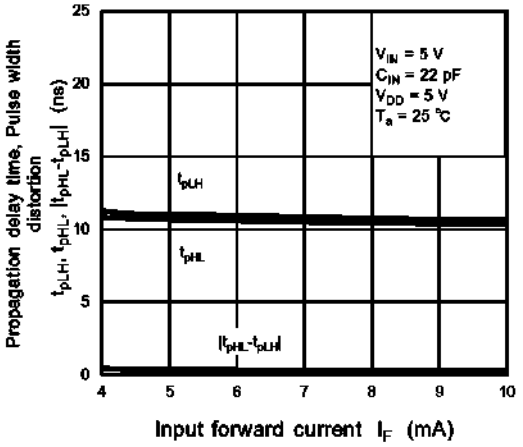

Fig. 12.2.15 t_{pHL}, t_{pLH}, $|t_{pHL} - t_{pLH}|$ - I_F

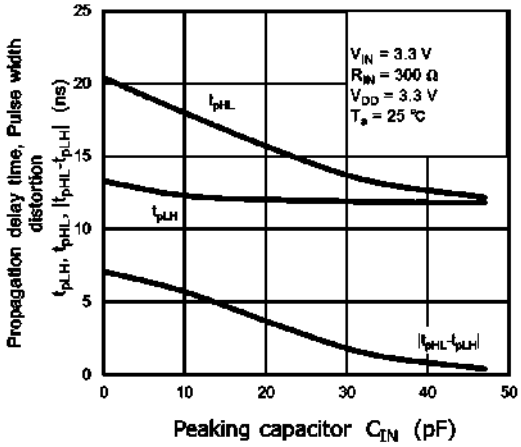

Fig. 12.2.16 t_{pHL}, t_{pLH}, $|t_{pHL} - t_{pLH}|$ - C_{IN}

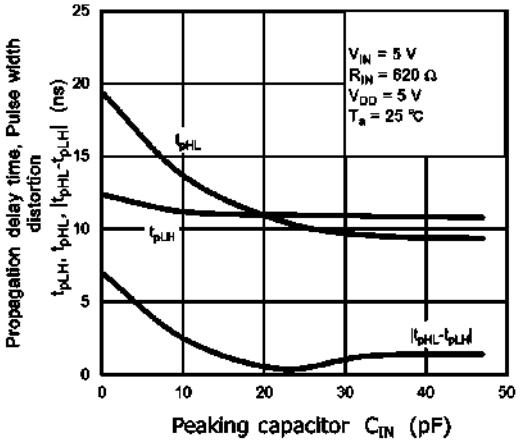

Fig. 12.2.17 t_{pHL}, t_{pLH}, $|t_{pHL} - t_{pLH}|$ - C_{IN}

Note: The above characteristics curves are presented for reference only and not guaranteed by production test, unless otherwise noted.

13. Soldering and Storage

13.1. Precautions for Soldering

The soldering temperature should be controlled as closely as possible to the conditions shown below, irrespective of whether a soldering iron or a reflow soldering method is used.

- When using soldering reflow.
  The soldering temperature profile is based on the package surface temperature.
  (See the figure shown below, which is based on the package surface temperature.)
  Reflow soldering must be performed once or twice.
  The mounting should be completed with the interval from the first to the last mountings being 2 weeks.

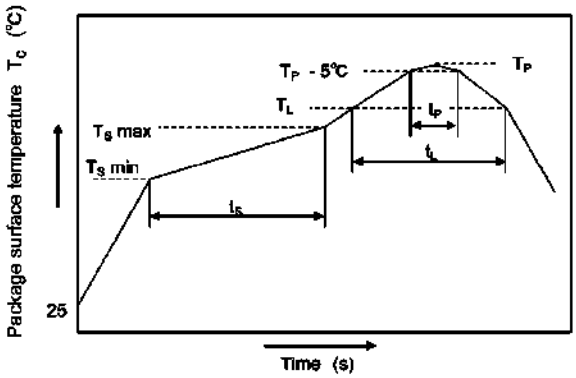

	Symbol	Min	Max	Unit
Preheat temperature	T_S	150	200	°C
Preheat time	t_S	60	120	s
Ramp-up rate (T_L to T_P)			3	°C/s
Liquidus temperature	T_L	217		°C
Time above T_L	t_L	60	150	s
Peak temperature	T_P		260	°C
Time during which T_c is between (T_P – 5) and T_P	t_P		30	s
Ramp-down rate (T_P to T_L)			6	°C/s

An Example of a Temperature Profile When Lead(Pb)-free Solder Is Used

- When using soldering flow
  Preheat the device at a temperature of 150 °C (package surface temperature) for 60 to 120 seconds.
  Mounting condition of 260 °C within 10 seconds is recommended.
  Flow soldering must be performed once.
- When using soldering Iron
  Complete soldering within 10 seconds for lead temperature not exceeding 260 °C or within 3 seconds not exceeding 350 °C
  Heating by soldering iron must be done only once per lead.

13.2. Precautions for General Storage

- Avoid storage locations where devices may be exposed to moisture or direct sunlight.
- Follow the precautions printed on the packing label of the device for transportation and storage.
- Keep the storage location temperature and humidity within a range of 5 °C to 35 °C and 45 % to 75 %, respectively.
- Do not store the products in locations with poisonous gases (especially corrosive gases) or in dusty conditions.
- Store the products in locations with minimal temperature fluctuations. Rapid temperature changes during storage can cause condensation, resulting in lead oxidation or corrosion, which will deteriorate the solderability of the leads.
- When restoring devices after removal from their packing, use anti-static containers.
- Do not allow loads to be applied directly to devices while they are in storage.
- If devices have been stored for more than two years under normal storage conditions, it is recommended that you check the leads for ease of soldering prior to use.

©2016-2017
Toshiba Electronic Devices & Storage Corporation

14. Land Pattern Dimensions (for reference only)

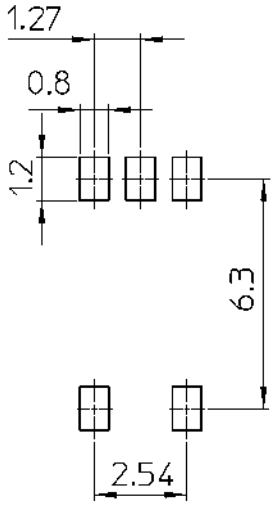

Unit: mm

15. Marking

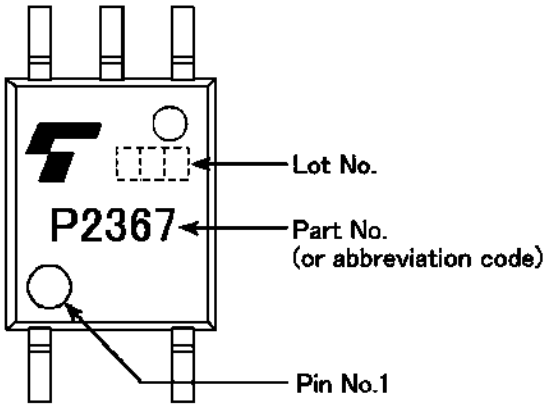

16. EN60747-5-5 Option (V4) Specification

- Part number: TLP2367 **(Note 1)**
- The following part naming conventions are used for the devices that have been qualified according to option (V4) of EN60747.

  Example: TLP2367(V4-TPL,E(O

  V4: EN60747 option
  TPL: Tape type
  E: [[G]]/RoHS COMPATIBLE **(Note 2)**
  O: Domestic ID (Country/Region of origin: Japan)

Note 1: Use TOSHIBA standard type number for safety standard application.
e.g., TLP2367(V4-TPL,E(O → TLP2367

Note 2: Please contact your Toshiba sales representative for details on environmental information such as the product's RoHS compatibility.
RoHS is the Directive 2011/65/EU of the European Parliament and of the Council of 8 June 2011 on the restriction of the use of certain hazardous substances in electrical and electronic equipment.

Description	Symbol	Rating	Unit
Application classification for rated mains voltage ≤150 Vrms for rated mains voltage ≤300 Vrms		 I-IV I-III	—
Climatic classification		40 / 125 / 21	—
Pollution degree		2	—
Maximum operating insulation voltage	V_{IORM}	707	Vpeak
Input to output test voltage, Method A V_{pr} = 1.6 × V_{IORM}, type and sample test t_p = 10 s, partial discharge < 5 pC	V_{pr}	1131	Vpeak
Input to output test voltage, Method B V_{pr} = 1.875 × V_{IORM}, 100 % production test t_p = 1 s, partial discharge < 5 pC	V_{pr}	1325	Vpeak
Highest permissible overvoltage (transient overvoltage, t_{pr} = 60 s)	V_{TR}	6000	Vpeak
Safety limiting values (max. permissible ratings in case of fault, also refer to thermal derating curve) current (input current I_F, P_{so} = 0) power (output or total power dissipation) temperature	 I_{si} P_{so} T_s	 250 400 150	 mA mW °C
Insulation resistance V_{IO} = 500 V, T_a = 25 °C V_{IO} = 500 V, T_a = 100 °C V_{IO} = 500 V, T_a = T_s	R_{si}	$\geq 10^{12}$ $\geq 10^{11}$ $\geq 10^{9}$	Ω

Fig. 16.1 EN60747 Isolation Characteristics

Minimum creepage distance	Cr	5.0 mm
Minimum clearance	Cl	5.0 mm
Minimum insulation thickness	ti	0.4 mm
Comparative tracking index	CTI	175

Fig. 16.2 Insulation Related Specifications (Note)

Note: This photocoupler is suitable for **safe electrical isolation** only within the safety limit data. Maintenance of the safety data shall be ensured by means of protective circuits.

Fig. 16.3 Marking on Packing

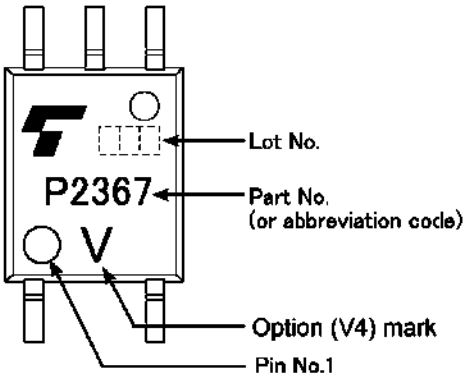

Fig. 16.4 Marking Example (Note)

Note: The above marking is applied to the photocouplers that have been qualified according to option (V4) of EN60747.

Figure 1 Partial discharge measurement procedure according to EN60747
Destructive test for qualification and sampling tests.

Method A

(for type and sampling tests, destructive tests)

t_1, t_2	= 1 to 10 s
t_3, t_4	= 1 s
t_p (Measuring time for partial discharge)	= 10 s
t_b	= 12 s
t_{ini}	= 60 s

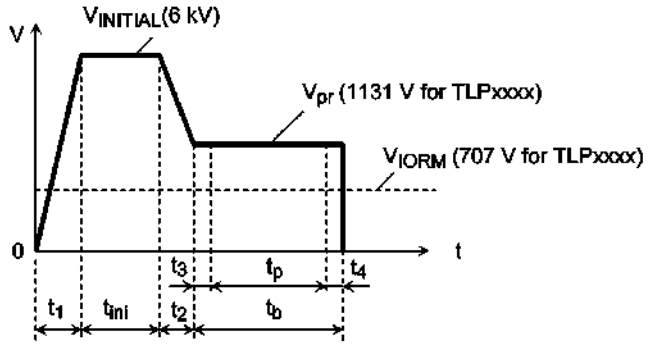

Figure 2 Partial discharge measurement procedure according to EN60747
Non-destructive test for100 % inspection.

Method B

(for sample test, non-destructive test)

t_3, t_4	= 0.1 s
t_p (Measuring time for partial discharge)	= 1 s
t_b	= 1.2 s

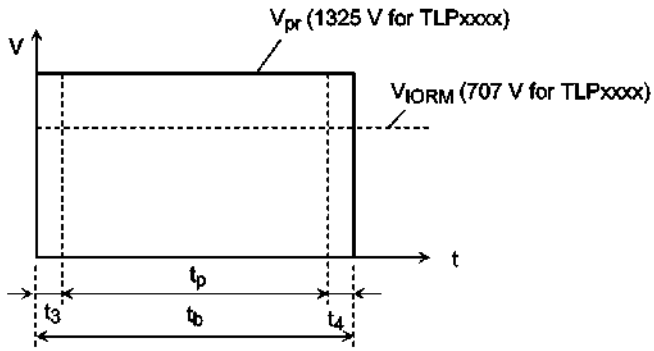

Figure 3 Dependency of maximum safety ratings on ambient temperature

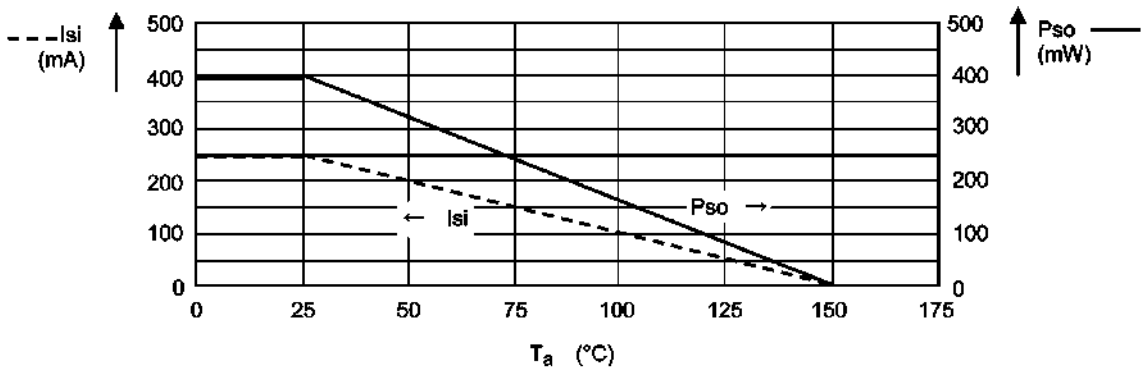

Fig. 16.5 Measurement Procedure

17. Specifications for Embossed-Tape Packing

17.1. Applicable Package

Package Name	Product Type
SO6	Mini flat coupler

17.2. Product Naming Conventions

Type of package used for shipment is denoted by a symbol suffix after a part number. The method of classification is as below.

Example) TLP2367(TPL,E(O

Part number: TLP2367
Tape type: TPL
[[G]]/RoHS COMPATIBLE: E (Note 1)
Domestic ID (Country/Region of origin: Japan): O

Note 1: Please contact your Toshiba sales representative for details on environmental information such as the product's RoHS compatibility.
RoHS is the Directive 2011/65/EU of the European Parliament and of the Council of 8 June 2011 on the restriction of the use of certain hazardous substances in electrical and electronic equipment.

17.3. Tape Dimensions Specification

Specification	Division	Packing Amount (A unit per reel)
TPL	L direction	3000
TPR	R direction	3000

17.3.1. Orientation of Device in Relation to Direction of Feed

Device orientation in the carrier cavities as shown in the following figure.

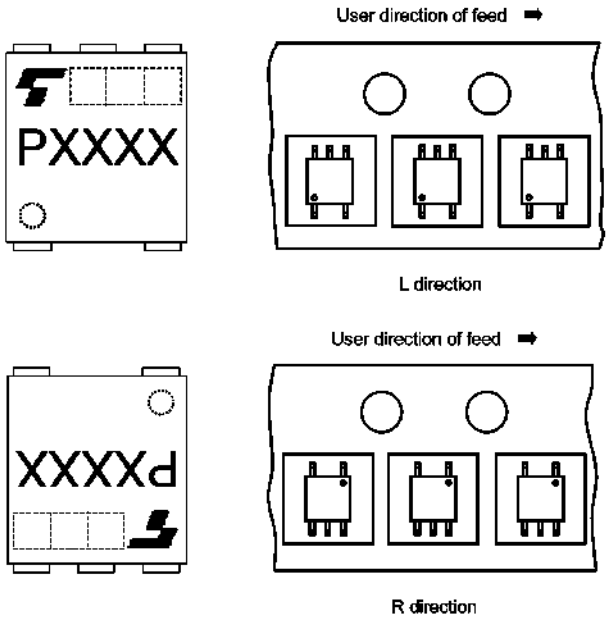

Orientation of Device in Relation to Direction of Tape Movement

17.3.2. Empty Device Recesses

Characteristics	Standard	Remarks
occurrences of 2 more successive empty cavities	0 device	Within any given 40-mm section of tape, not including leader and trailer
Single empty cavity	6 devices (max) per reel	Not including leader and trailer

17.3.3. Tape Leader and Trailer

The start of the tape has 14 or more empty holes. The end of the tape has 34 or more empty holes and more than 30 mm only for a cover tape.

17.3.4. Tape Dimensions

Tape material: Plastic (for protection against static electricity)

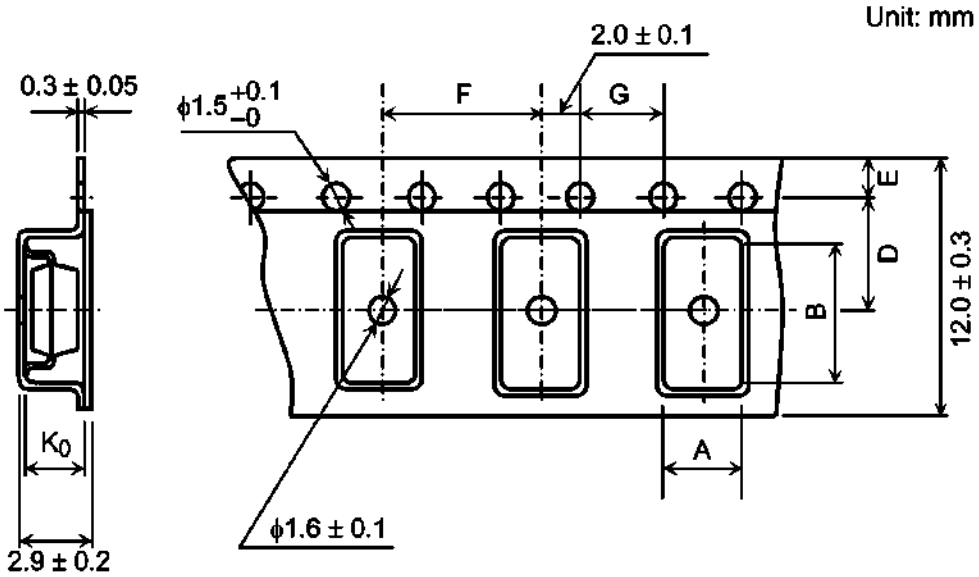

Table Tape Dimensions (unit: mm, tolerance: ±0.1)

Symbol	Dimension	Remark
A	4.0	—
B	7.6	—
D	5.5	Center line of embossed cavity and sprocket hole
E	1.75	Distance between tape edge and sprocket hole center
F	8.0	Cumulative error +0.1/-0.3 (max) per 10 empty cavities holes
G	4.0	Cumulative error +0.1/-0.3 (max) per 10 sprocket holes
K_0	2.6	Internal space

17.3.5. Reel Specification

Material: Plastic (for protection against static electricity)

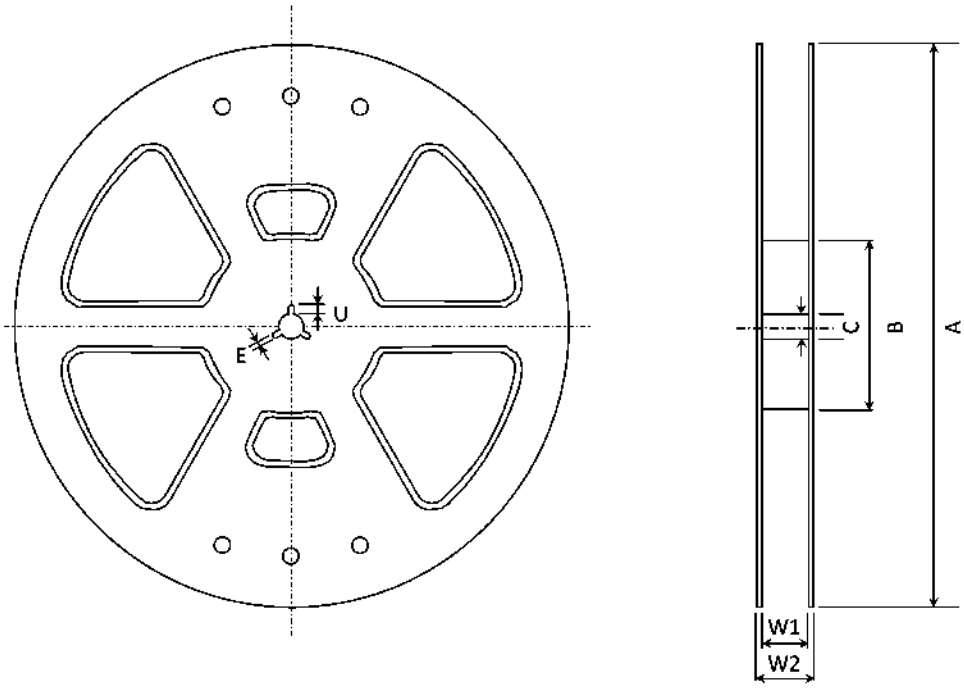

Table Reel Dimensions (unit: mm)

Symbol	Dimension
A	ϕ330 ± 2.0
B	ϕ80 ± 1.0
C	ϕ13 ± 0.5
E	2.0 ± 0.5
U	4.0 ± 0.5
W1	13.5 ± 0.5
W2	17.5 ± 1.0

17.4. Packing (Note)

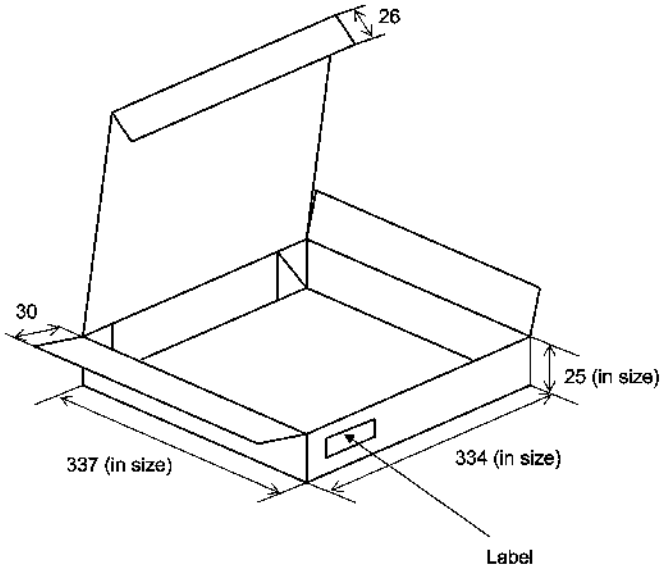

1 reel/carton (unit: mm)

Note: Taping reel diameter: ϕ330 mm

17.5. Label Format

(1) Carton: The label provides the part number, quantity, lot number, the Toshiba logo, etc.

(2) Reel: The label provides the part number, the taping name, quantity, lot number, etc.

17.6. Ordering Information

When placing an order, please specify the part number, tape type and quantity as shown in the following example.

Example) TLP2367(TPL,E(O 3000 pcs

Part number: TLP2367
Tape type: TPL (12-mm pitch)
[[G]]/RoHS COMPATIBLE: E (Note 1)
Domestic ID (Country/Region of origin: Japan): O
Quantity (must be a multiple of 3000): 3000 pcs

Note 1: Please contact your Toshiba sales representative for details on environmental information such as the product's RoHS compatibility.
RoHS is the Directive 2011/65/EU of the European Parliament and of the Council of 8 June 2011 on the restriction of the use of certain hazardous substances in electrical and electronic equipment.

Package Dimensions

Unit: mm

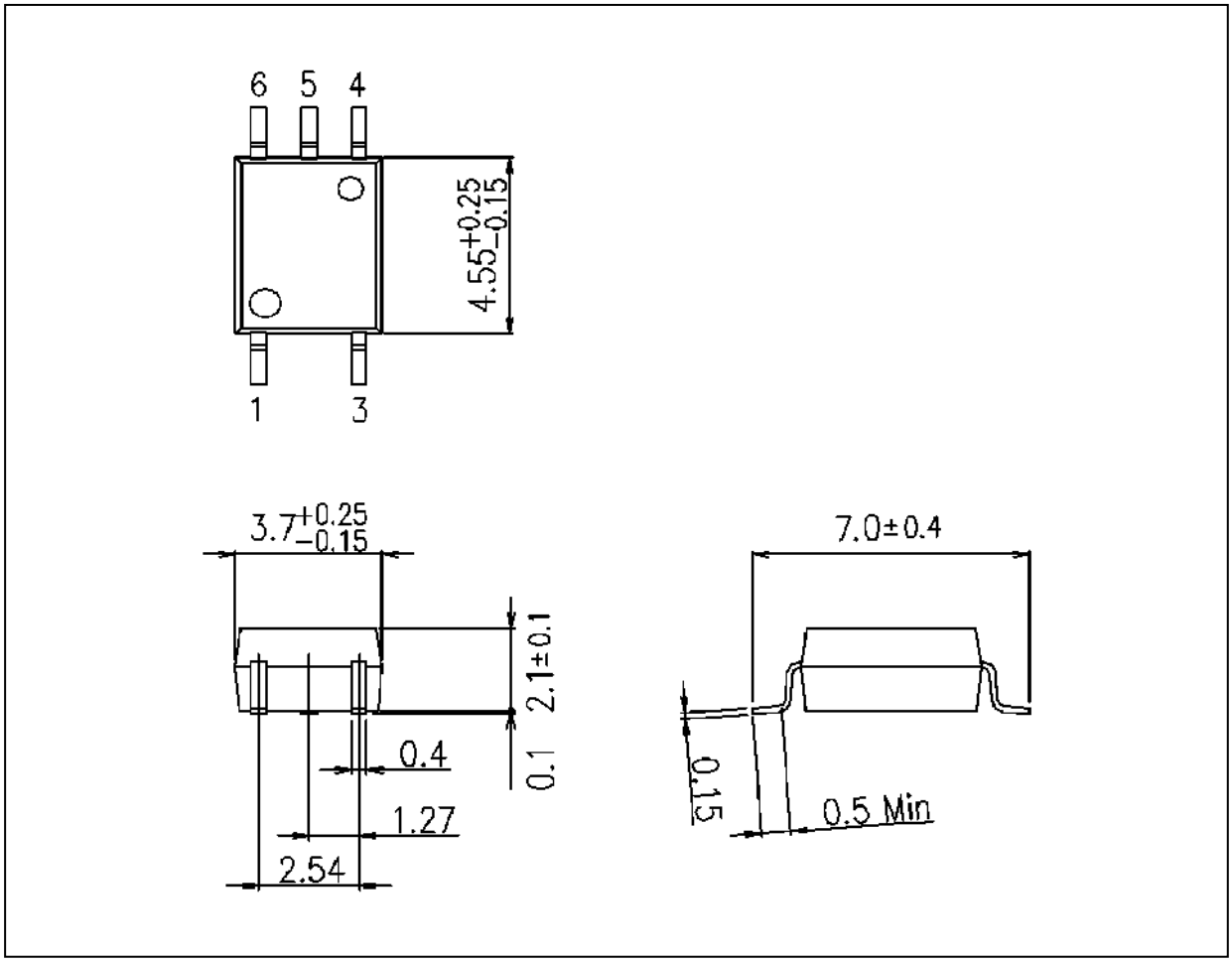

Weight: 0.08 g (typ.)

Package Name(s)
TOSHIBA: 11-4L1S

RESTRICTIONS ON PRODUCT USE

Toshiba Corporation and its subsidiaries and affiliates are collectively referred to as "TOSHIBA".
Hardware, software and systems described in this document are collectively referred to as "Product".

- TOSHIBA reserves the right to make changes to the information in this document and related Product without notice.
- This document and any information herein may not be reproduced without prior written permission from TOSHIBA. Even with TOSHIBA's written permission, reproduction is permissible only if reproduction is without alteration/omission.
- Though TOSHIBA works continually to improve Product's quality and reliability, Product can malfunction or fail. Customers are responsible for complying with safety standards and for providing adequate designs and safeguards for their hardware, software and systems which minimize risk and avoid situations in which a malfunction or failure of Product could cause loss of human life, bodily injury or damage to property, including data loss or corruption. Before customers use the Product, create designs including the Product, or incorporate the Product into their own applications, customers must also refer to and comply with (a) the latest versions of all relevant TOSHIBA information, including without limitation, this document, the specifications, the data sheets and application notes for Product and the precautions and conditions set forth in the "TOSHIBA Semiconductor Reliability Handbook" and (b) the instructions for the application with which the Product will be used with or for. Customers are solely responsible for all aspects of their own product design or applications, including but not limited to (a) determining the appropriateness of the use of this Product in such design or applications; (b) evaluating and determining the applicability of any information contained in this document, or in charts, diagrams, programs, algorithms, sample application circuits, or any other referenced documents; and (c) validating all operating parameters for such designs and applications. **TOSHIBA ASSUMES NO LIABILITY FOR CUSTOMERS' PRODUCT DESIGN OR APPLICATIONS.**
- **PRODUCT IS NEITHER INTENDED NOR WARRANTED FOR USE IN EQUIPMENTS OR SYSTEMS THAT REQUIRE EXTRAORDINARILY HIGH LEVELS OF QUALITY AND/OR RELIABILITY, AND/OR A MALFUNCTION OR FAILURE OF WHICH MAY CAUSE LOSS OF HUMAN LIFE, BODILY INJURY, SERIOUS PROPERTY DAMAGE AND/OR SERIOUS PUBLIC IMPACT ("UNINTENDED USE").** Except for specific applications as expressly stated in this document, Unintended Use includes, without limitation, equipment used in nuclear facilities, equipment used in the aerospace industry, medical equipment, equipment used for automobiles, trains, ships and other transportation, traffic signaling equipment, equipment used to control combustions or explosions, safety devices, elevators and escalators, devices related to electric power, and equipment used in finance-related fields. **IF YOU USE PRODUCT FOR UNINTENDED USE, TOSHIBA ASSUMES NO LIABILITY FOR PRODUCT.** For details, please contact your TOSHIBA sales representative.
- Do not disassemble, analyze, reverse-engineer, alter, modify, translate or copy Product, whether in whole or in part.
- Product shall not be used for or incorporated into any products or systems whose manufacture, use, or sale is prohibited under any applicable laws or regulations.
- The information contained herein is presented only as guidance for Product use. No responsibility is assumed by TOSHIBA for any infringement of patents or any other intellectual property rights of third parties that may result from the use of Product. No license to any intellectual property right is granted by this document, whether express or implied, by estoppel or otherwise.
- **ABSENT A WRITTEN SIGNED AGREEMENT, EXCEPT AS PROVIDED IN THE RELEVANT TERMS AND CONDITIONS OF SALE FOR PRODUCT, AND TO THE MAXIMUM EXTENT ALLOWABLE BY LAW, TOSHIBA (1) ASSUMES NO LIABILITY WHATSOEVER, INCLUDING WITHOUT LIMITATION, INDIRECT, CONSEQUENTIAL, SPECIAL, OR INCIDENTAL DAMAGES OR LOSS, INCLUDING WITHOUT LIMITATION, LOSS OF PROFITS, LOSS OF OPPORTUNITIES, BUSINESS INTERRUPTION AND LOSS OF DATA, AND (2) DISCLAIMS ANY AND ALL EXPRESS OR IMPLIED WARRANTIES AND CONDITIONS RELATED TO SALE, USE OF PRODUCT, OR INFORMATION, INCLUDING WARRANTIES OR CONDITIONS OF MERCHANTABILITY, FITNESS FOR A PARTICULAR PURPOSE, ACCURACY OF INFORMATION, OR NONINFRINGEMENT.**
- GaAs (Gallium Arsenide) is used in Product. GaAs is harmful to humans if consumed or absorbed, whether in the form of dust or vapor. Handle with care and do not break, cut, crush, grind, dissolve chemically or otherwise expose GaAs in Product.
- Do not use or otherwise make available Product or related software or technology for any military purposes, including without limitation, for the design, development, use, stockpiling or manufacturing of nuclear, chemical, or biological weapons or missile technology products (mass destruction weapons). Product and related software and technology may be controlled under the applicable export laws and regulations including, without limitation, the Japanese Foreign Exchange and Foreign Trade Law and the U.S. Export Administration Regulations. Export and re-export of Product or related software or technology are strictly prohibited except in compliance with all applicable export laws and regulations.
- Please contact your TOSHIBA sales representative for details as to environmental matters such as the RoHS compatibility of Product. Please use Product in compliance with all applicable laws and regulations that regulate the inclusion or use of controlled substances, including without limitation, the EU RoHS Directive. **TOSHIBA ASSUMES NO LIABILITY FOR DAMAGES OR LOSSES OCCURRING AS A RESULT OF NONCOMPLIANCE WITH APPLICABLE LAWS AND REGULATIONS.**

©2016-2017
Toshiba Electronic Devices & Storage Corporation