STANDARD HIGH VOLTAGE VERSION

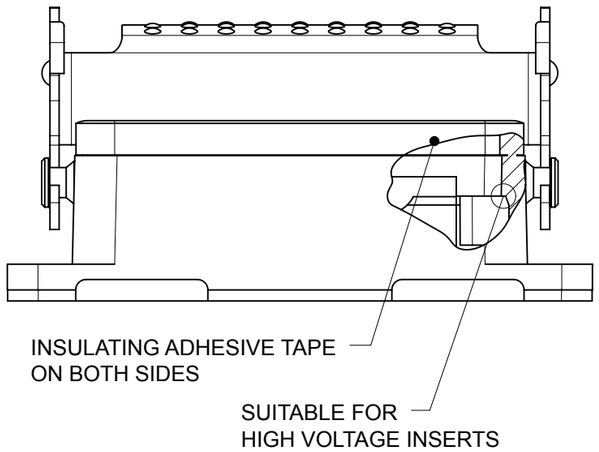

STANDARD VERSION

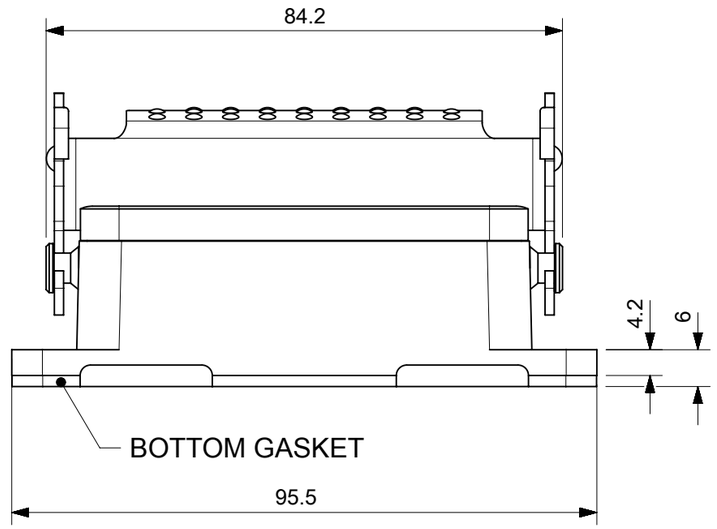

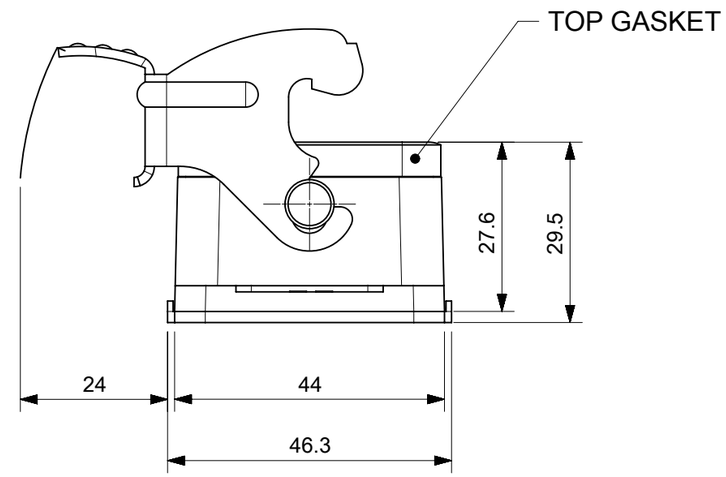

PANEL CUT OUT

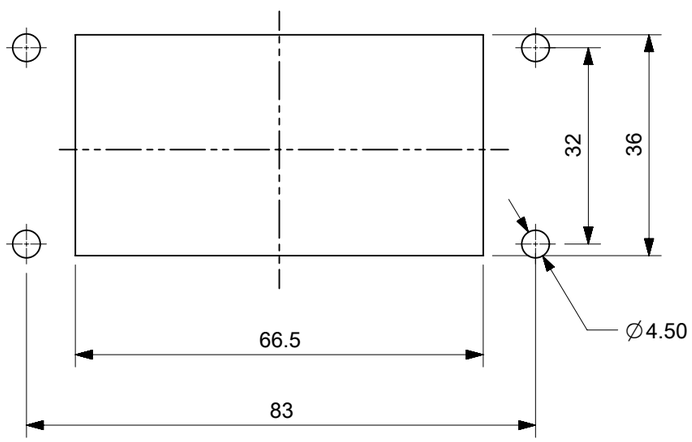

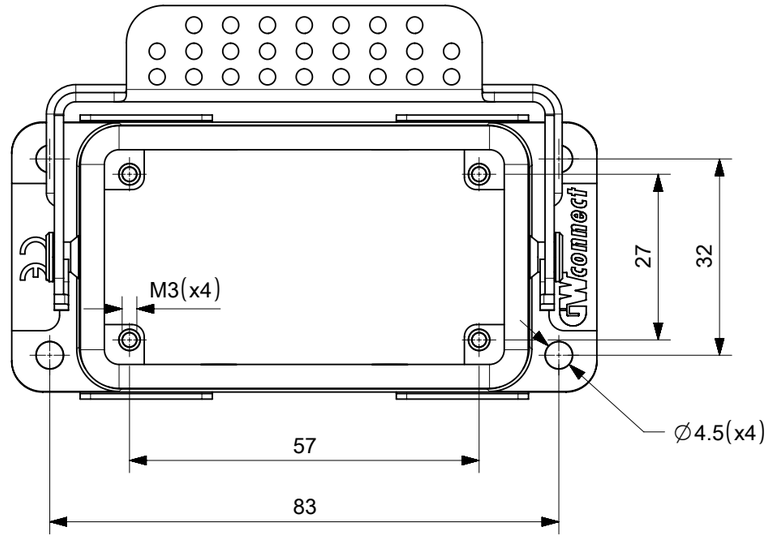

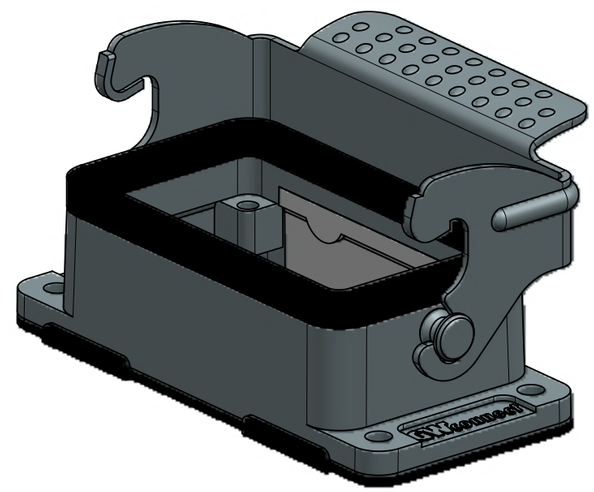

SAP.No.	Eng.No.	TYPE
936011569	7810.6403.0	STANDARD
936011571	7810.6403.2	STANDARD HIGH VOLTAGE

DOCUMENT STATUS	P1	RELEASE DATE	2018/06/12 08:11:15

FORMAT: master-tb-prod-A3
REVISION: H
DATE: 2017/10/06

THIS DRAWING CONTAINS INFORMATION THAT IS PROPRIETARY TO MOLEX ELECTRONIC TECHNOLOGIES, LLC AND SHOULD NOT BE USED WITHOUT WRITTEN PERMISSION

SYMBOLS: = 0

DIMENSION UNITS: mm
SCALE: 1:1
GENERAL TOLERANCES (UNLESS SPECIFIED)
ANGULAR TOL ± °
4 PLACES ±
3 PLACES ±
2 PLACES ±
1 PLACE ±
0 PLACES ±
DRAFT WHERE APPLICABLE MUST REMAIN WITHIN DIMENSIONS

CURRENT REV DESC:

EC NO: 177920
DRWN: AKHEMIRI 2018/06/11
CHK'D: DMERONI 2018/06/11
APPR: AMELZI 2018/06/12

INITIAL REVISION:
DRWN: AKHEMIRI 2018/06/07
APPR: AMELZI 2018/06/12

FIRST ANGLE PROJECTION
DRAWING: A3-SIZE
SERIES: 93601

molex

10B STANDARD AND HIGH VOLTAGE BULKHEAD MOUNTING HOUSING 1 LEVER

PRODUCT CUSTOMER DRAWING

DOCUMENT NUMBER	DOC TYPE	DOC PART	REVISION
936011571	PSD	000	A

MATERIAL NUMBER	CUSTOMER	SHEET NUMBER
SEE TABLE	GENERAL MARKET	1 OF 1