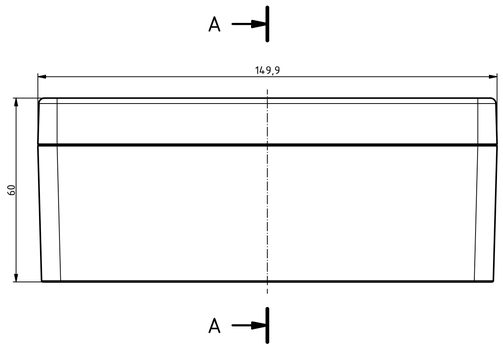

A-A (1 : 1)

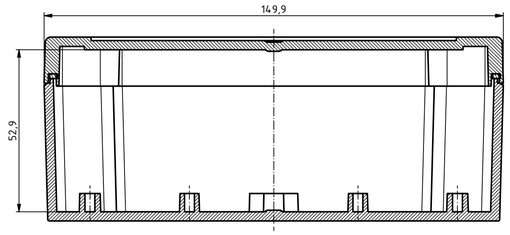

ISO (1 : 1)

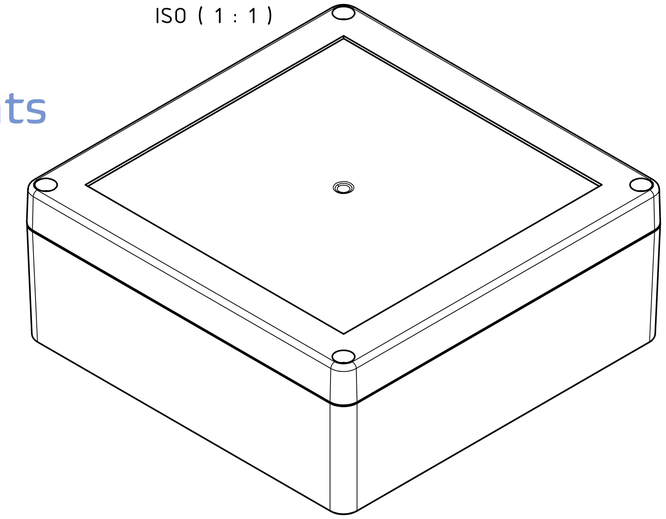

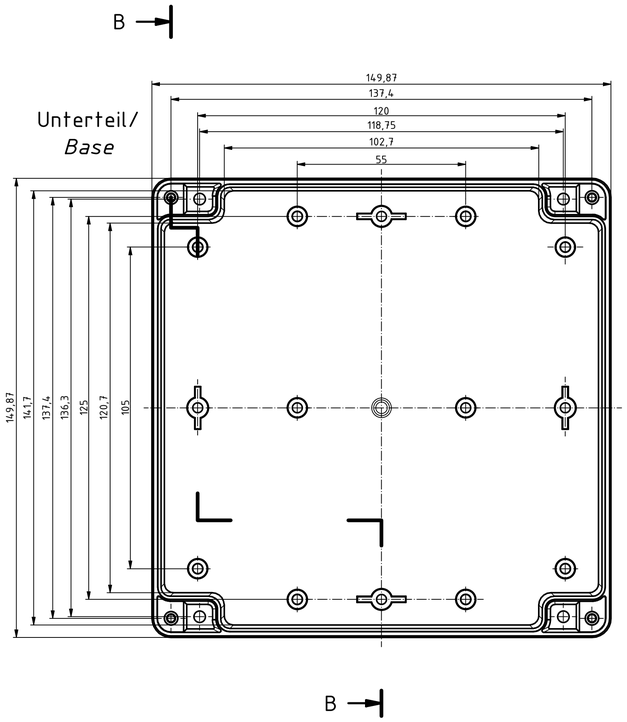

B-B (1 : 1)

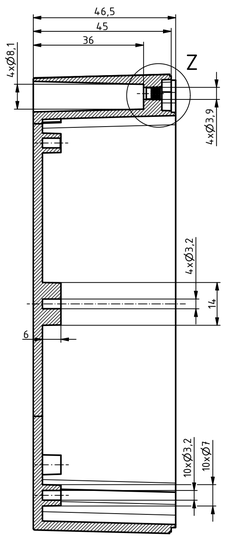

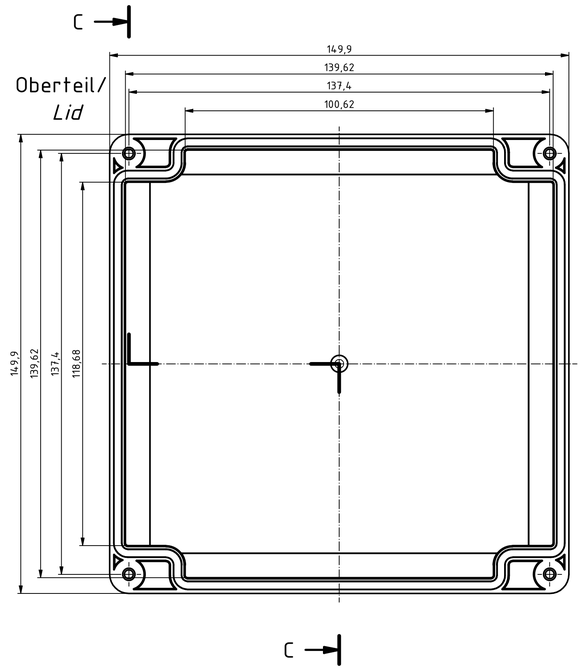

C-C (1 : 1)

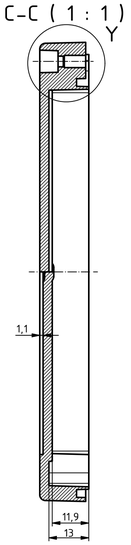

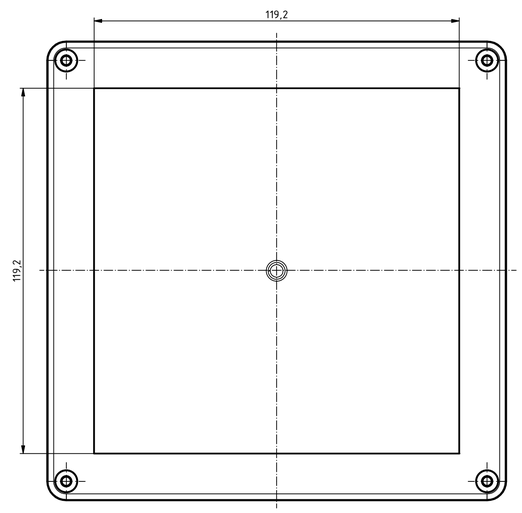

Z (2 : 1)

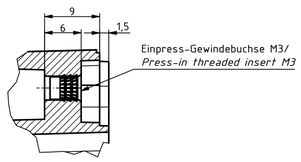

Y (2 : 1)

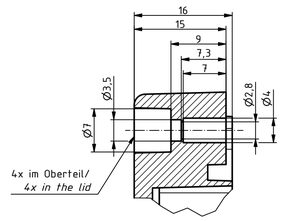

For Version with enclosed gasket
Protection class IP40. To achieve protection class IP65, the enclosed gasket must be mounted correctly. The gasket must not be stretched or compressed in the corners. Ends cut obliquely and glued, so that the cut ends are pressed together by the spring pressure.

SPECIFICATION	
RND NUMBER	RND 455-01402
Distrelec NUMBER	303-75-346
BAR CODE NUMBER	0653415230267
Product text English	Enclosure PC GREY. transp. lid. IP66.68
Outer Dimensions	150 x 150 x 60mm
Inner dimension length	120.7 x 141.7 x 52.9mm
Material	Polycarbonate
Colour	light grey. similar to RAL 7035
Lid	Transparent
Wall brackets	N/A
Colour	light grey. similar to RAL 7035
Protection class	IP66 IP68 IK07