2-Colour Display High-Precision Digital Pressure Switch

Settings can be copied to up to 10 slave sensors at once.

The settings of the master sensor can be copied to the slave sensors.

- Reduced setting efforts
- Reduced chance of set-value input error

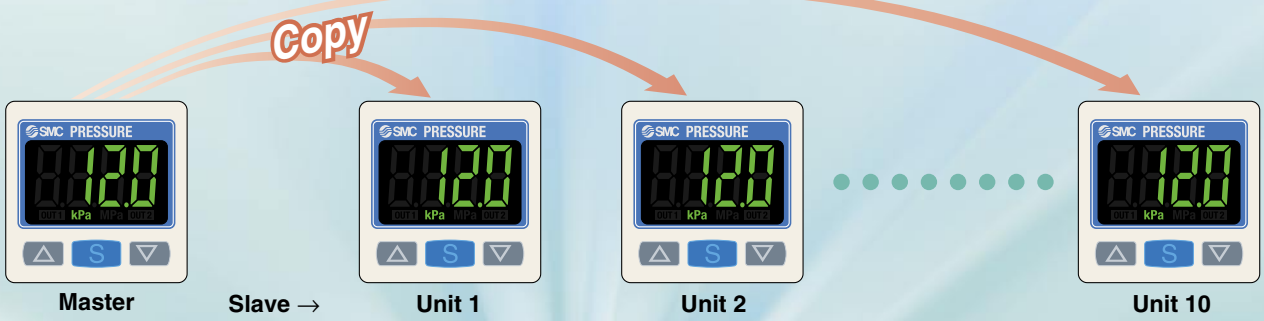

3-step setting

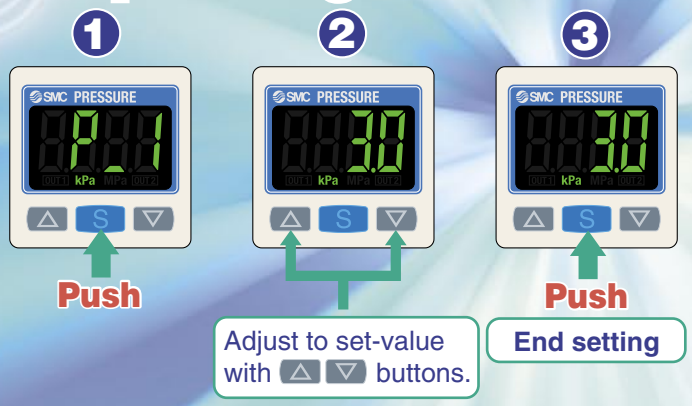

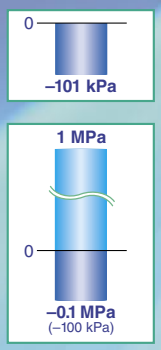

Added vacuum range.

- Rated pressure range: 0.0 to –101.0 kPa

Expanded pressure range for positive pressure type to the vacuum range:

- Rated pressure range: –0.1 to 1.0 MPa

2 added outputs:

- NPN or PNP open collector 2 outputs
- NPN or PNP open collector 1 output + analogue output (1 to 5 V or 4 to 20 mA)

RoHS compliant

Series ZSE30A(F)/ISE30A

SMC

CAT.EUS100-70A-UK

Mounting

Bracket configuration allows mounting in four positions.

Bracket A

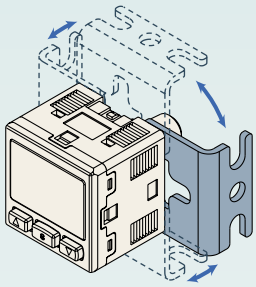

Bracket B

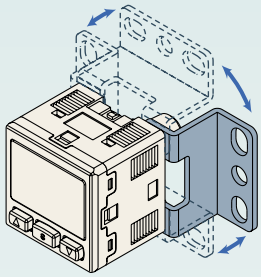

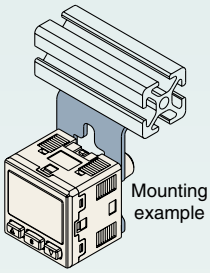

Mounting example

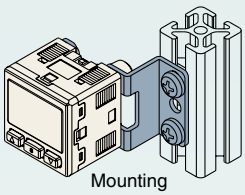

Mounting example

Panel mount

Mountable side by side without clearance

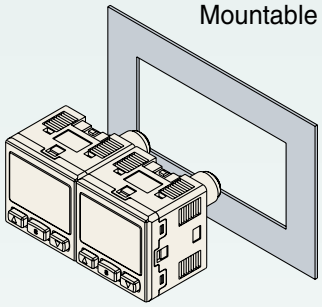

One opening!

- **Reduction of panel-cut job**
- **Space saving**

Series

Series	ZSE30A (vacuum)	ZSE30AF (compound)	ISE30A (positive)
Rated pressure range	0.0 to –101.0 kPa (0 / –101 kPa)	–100.0 to 100.0 kPa (100 kPa / 0 / –100 kPa)	–0.100 to 1.000 MPa (1 MPa / 0 / –0.1 MPa (–100 kPa))
Set pressure range	10.0 to –105.0 kPa	–105.0 to 105.0 kPa	–0.105 to 1.050 MPa
Withstand pressure	500 kPa	500 kPa	1.5 MPa
Minimum unit setting	0.1 kPa	0.1 kPa	0.001 MPa
Output	NPN or PNP open collector 1 output NPN or PNP open collector 2 outputs NPN or PNP open collector 1 output + Analog output (voltage or current)		
Piping	R1/8, NPT1/8 (M5 female threaded) ø4, ø6, ø5/32, ø1/4 one-touch fittings		

Replaceable one-touch fittings

The clip type allows easy removal of fittings. Fitting's type and size can be changed.

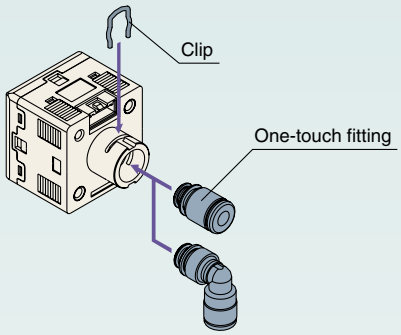

Lead wire

Connector cover added.

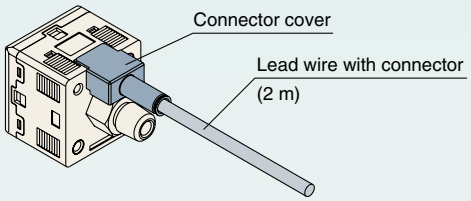

4-digit display

4-digit display allows easy reading of displayed values.

Example: 0.5 MPa

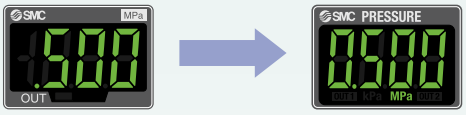

Series 30 (Conventional) → **Series 30A (New)**

Possible to check set-value during key locking

Additional functions

Secret code setting function

The key locking function keeps unauthorized users from tampering with buttons.

Power-saving function

Power consumption is reduced by turning off the monitor (power consumption reduced by up to 20%.)

Resolution-switch function

It reduces the monitor to flicker.

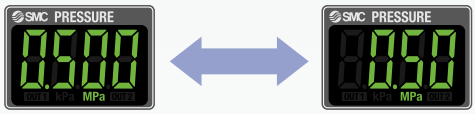

1/1000 ↔ 1/100

(Accuracy does not changed, only displayed values.)

MPa/kPa switch function

Vacuum, compound and/or positive pressure can be displayed both in MPa or kPa.

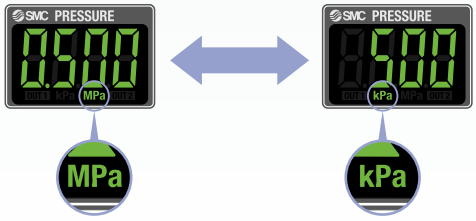

2-Colour Display High-Precision Digital Pressure Switch

Series ZSE30A(F)/ISE30A

How to Order

Output

N	NPN open collector 1 output
P	PNP open collector 1 output
A	NPN open collector 2 outputs
B	PNP open collector 2 outputs
C Note)	NPN open collector 1 output + Analogue voltage output
D Note)	NPN open collector 1 output + Analogue current output
E Note)	PNP open collector 1 output + Analogue voltage output
F Note)	PNP open collector 1 output + Analogue current output

Note) Made to Order

Rated pressure range

ISE30A	–0.1 to 1 MPa

For positive pressure

ISE30A – 01 – N – M □ □ □

For vacuum/ compound pressure

ZSE30A – 01 – N – M □ □ □

Rated pressure range

ZSE30A	0 to –101 kPa
ZSE30AF	–100 to 100 kPa

Piping

01	R1/8 (M5 female threaded)	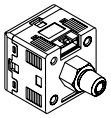
N01 Note)	NPT1/8 (M5 female threaded)	
C4H	One-touch fitting ø4 mm, ø5/32 inch	Straight type 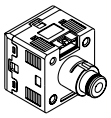
C6H	One-touch fitting ø6 mm	
N7H	One-touch fitting ø1/4 inch	
C4L	One-touch fitting ø4 mm, ø5/32 inch	Elbow type 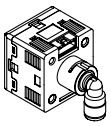
C6L	One-touch fitting ø6 mm	
N7L	One-touch fitting ø1/4 inch	

Note) Made to Order

Display unit

—	With unit display Note 2) switching function
M	Fixed SI unit Note 3)
P Note 1)	With unit display Note 2) switching function (Initial value PSI)

Note 1) Made to Order
Note 2) Under the New Measurement Law, sales of switches with the unit switching function have not been allowed for use in Japan.
Note 3) Fixed unit kPa, MPa

Option 1

—	Without lead wire	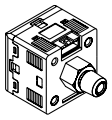
L	Lead wire with connector (Lead wire length 2 m) Note)	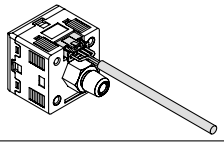
G	Lead wire with connector (lead wire length 2 m) Note) and with connector cover	Connector cover 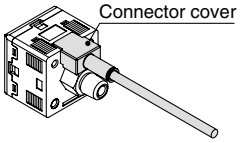

Note) For output types N and P, the number of core of lead wires will be 3, and for other types, it will be 4.

Option 3

Symbol	Operating manual		Calibration certificate
	Booklet	CD-ROM	
—	○	—	—
Y	—	—	—
W	—	○	—
K	○	—	○
T	—	—	○
R	—	○	○

Option 2

—	None
A1	Bracket A 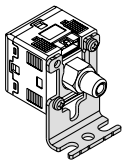
A2	Bracket B 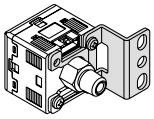
B	Panel mount adapter 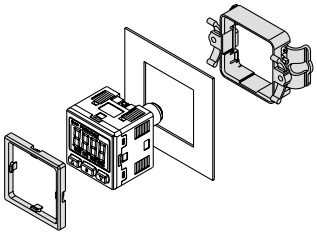
D	Panel mount adapter + front protection cover 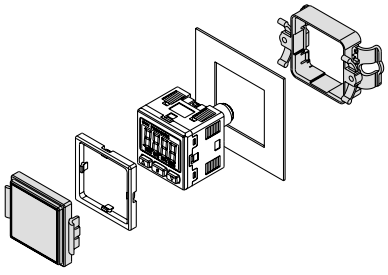

Specifications

Model			ZSE30A (Vacuum pressure)	ZSE30AF (Compound pressure)	ISE30A (Positive pressure)
Rated pressure range			0.0 to –101.0 kPa	–100.0 to 100.0 kPa	–0.100 to 1.000 MPa
Regulating pressure range			10.0 to –105.0 kPa	–105.0 to 105.0 kPa	–0.105 to 1.050 MPa
Proof pressure			500 kPa	500 kPa	1.5 MPa
Setting/display resolution			0.1 kPa	0.1 kPa	0.001 MPa
Applicable fluid			Air, non-corrosive gas, non-flammable gas		
Power supply voltage			12 to 24 VDC ±10%, Ripple (p-p) 10% or less (with power supply polarity protection)		
Current consumption			40 mA or less		
Switch output			NPN or PNP open collector 1 output, NPN or PNP open collector 2 outputs (selectable)		
	Maximum load current		80 mA		
	Maximum applied voltage		28 V (with NPN output)		
	Residual voltage		1 V or less (with load current of 80 mA)		
	Response time		2.5 ms or less (with anti-chattering function: 20, 100, 500, 1000, 2000 ms)		
	Short circuit protection		With short circuit protection		
Repeatability			±0.2% F.S. ±1 digit		
Hysteresis	Hysteresis mode		Variable (0 or above) Note 1)		
	Window comparator mode				
Analogue output	Note 2) Voltage output	Output voltage	1 to 5V ±2.5% F.S. or less (with rated pressure range)		0.6 to 5 V ±2.5% F.S. or less (with rated pressure range)
		Linearity	±1% F.S. or less		
		Output impedance	Approx. 1 kΩ		
	Note 3) Current output	Output current	4 to 20 mA ±2.5% F.S. or less (with rated pressure range)		2.4 to 20 mA ±2.5% F.S. or less (with rated pressure range)
		Linearity	±1% F.S. or less		
		Load impedance	Maximum load impedance: 300 Ω with power supply voltage of 12 V; 600 Ω with power supply voltage of 24 V Minimum load impedance: 50 Ω		
Display			4-digit, 7-segment, 2-colour LCD (Red and Green)		
Display accuracy			±2% F.S. ±1 digit (ambient temperature of 25 ±3°C)		
Indicator light			Lights up when switch output is ON. OUT1: Green, OUT2: Red		
Environment resistance	Enclosure		IP40		
	Operating temperature range		Operating: 0 to 50°C, Stored: –10 to 60°C (no freezing or condensation)		
	Operating humidity range		Operating/Stored: 35 to 85% RH (no condensation)		
	Withstand voltage		1000 VAC for 1 minute between live parts and enclosure		
	Insulation resistance		50 MΩ or more between live parts and enclosure (at 500 VDC Mega)		
	Vibration resistance		10 to 150 Hz, 1.5 mm amplitude (or 20 m/s^2 acceleration), in X, Y, Z directions, for 2 hours each (Non-energized)		
	Impact resistance		100 m/s^2 in X, Y, Z directions, 3 times each (non-energised)		
Temperature characteristics			±2% F.S. (based on 25°C)		
Lead wire			Oilproof heavy-duty vinyl cable, 3 cores ø3.5, 2 m 4 cores Conductor area: 0.15 mm^2 (AWG26), Insulator O.D.: 1.0 mm		
Standards			CE Marking, UL/CSA, RoHS compliance		

Note 1) If applied pressure fluctuates near the set value, set the hysteresis above the fluctuation range to prevent chattering.
Note 2) When analogue the voltage output is selected, a simultaneous selection of switch output and current output is not available.
Note 3) When analogue the current output is selected, a simultaneous selection of switch output and voltage output is not available.

Piping Specifications

Model		01	N01	C4H	C6H	N7H	C4L	C6L	N7L
Port size		R1/8 M5 x 0.8	NPT1/8 M5 x 0.8	—	—	—	—	—	—
	One-touch fitting, Straight type	—	—	ø4 mm ø5/32 inch	ø6 mm	ø1/4 inch	—	—	—
	One-touch fitting, Elbow type	—	—	—	—	—	ø4 mm ø5/32 inch	ø6 mm	ø1/4 inch
Wetted parts material	Sensor pressure receiving area	Sensor pressure receiving area: Silicon							
	Piping port	C3602 (electroless nickel plated) O-ring: HNBR		PBT, POM, Stainless steel 304, C3604 (electroless nickel plated) O-ring: NBR					
Weight	Including lead wire with connector (3 cores, 2 m)	81 g		70 g	71 g	73 g	75 g	73 g	75 g
	Including lead wire with connector (4 cores, 2 m)	85 g		74 g	75 g	77 g	79 g	77 g	79 g
	Excluding lead wire with connector	43 g		32 g	33 g	35 g	37 g	35 g	37 g

Optional Part No.

When optional parts are required separately, use the following part numbers to place an order.

Part no.	Option	Note
ZS-38-A1	Bracket A	Mounting screw (with 2 pcs. of M3 x 5L)
ZS-38-A2	Bracket B	Mounting screw (with 2 pcs. of M3 x 5L)
ZS-27-C	Panel mount adapter	Mounting screw (with 2 pcs. of M3 x 8L)
ZS-27-D	Panel mount adapter + front protection cover	Mounting screw (with 2 pcs. of M3 x 8L)
ZS-27-01	Front protection cover	
ZS-38-3L	Lead wire with connector	3 cores, for 1 output, 2 m
ZS-38-4L	Lead wire with connector	4 cores, for 2 outputs, 2 m
ZS-38-3G	Lead wire with connector (with connector cover)	3 cores, for 1 output, 2 m
ZS-38-4G	Lead wire with connector (with connector cover)	4 cores, for 2 outputs, 2 m

Part no.	Option	Note
ZS-38-5L	Lead wire with a connector for copying	3 cores, copy function, 1 m
ZS-38-U	Lead wire unit with a connector for copying	Copy function (up to 10 slaves)
ZS-38-C4H	One-touch fittings ø4 mm straight	O-ring, one-touch clip included
ZS-38-C6H	One-touch fittings ø6 mm straight	O-ring, one-touch clip included
ZS-38-N7H	One-touch fittings ø1/4 inch straight	O-ring, one-touch clip included
ZS-38-C4L	One-touch fittings ø4 mm elbow	O-ring, one-touch clip included
ZS-38-C6L	One-touch fittings ø6 mm elbow	O-ring, one-touch clip included
ZS-38-N7L	One-touch fittings ø1/4 inch elbow	O-ring, one-touch clip included
ZS-38-H	Operating manual CD-ROM	

Analogue Output

Output voltage

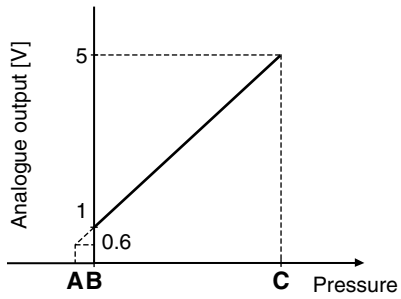

Output current

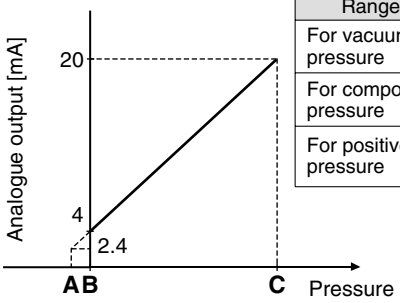

Range	Rated pressure range	A	B	C
For vacuum pressure	0.0 to –101.0 kPa	—	0	–101 kPa
For compound pressure	–100.0 to 100.0 kPa	—	–100 kPa	100 kPa
For positive pressure	–0.100 to 1.000 MPa	–0.1 kPa	0	1 MPa

Descriptions

Unit display

Displays unit being used (only kPa and MPa).

OUT1 Output display (Green)

Lights up when switch output (OUT1) is turned ON.

△ UP button

Use this button to select the mode or increase the ON/OFF set value.
It is also used for switching to the peak display mode.

S SET button

Use this button to switch the mode and set the set value.

LCD display

Displays the current pressure condition, setting mode, and error codes. A display colour type can be selected from either a single colour display with red or green, or 2-colour display in which green and red are switched accordeing to the output. Four different display settings are available.

OUT2 Output display (Red)

Lights up when switch output (OUT2) is turned ON.

▽ DOWN button

Use this button to select the mode or decrease the ON/OFF set value.
It is also used for switching to the bottom value display mode.

Functions (Refer to pages 10 and 11 for details.)

Copy function	Copies the settings of the master sensor to the slave sensors.
Auto-preset function	Calculates and enters rough set values automatically from the actual operating conditions.
Precision indicator setting function	Evens out deviations in the displayed value.
Peak display function	Can retain the maximum pressure value displayed during measurement.
Bottom display function	Can retain the minimum pressure value displayed during measurement.
Key lock function (Security code input can be selected)	The key board can be locked to prevent any incorrect function of the switch.
Zero-out function	The pressure display can be set at zero when the pressure is open to the atmosphere.
Anti-chattering function	Prevents possible malfunction due to sudden fluctuations in the primary pressure by adjusting the response time.
Unit display switching function	Can convert the display value.
Power-saving mode	Reduces power consumption.
Display resolution-switch function	Converts display resolution from the normal value of 1/1000 to 1/100. It reduces the monitor to flicker.
kPa⇔MPa switch function	Converts the unit between kPa and MPa.

Internal Circuits and Wiring Examples

Z/ISE30A(F) –□–■–□□□□

Output

N

NPN (1 output)

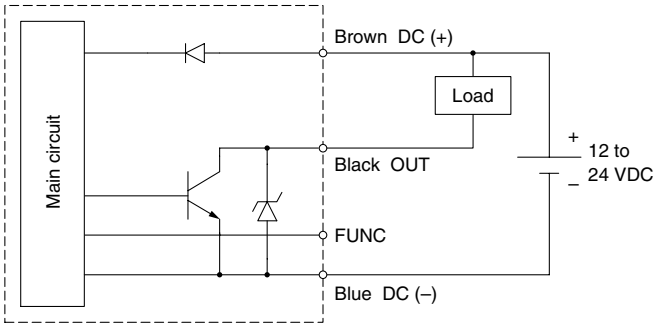

Max. 28 V, 80 mA
Residual voltage 1 V or less

P

PNP (1 output)

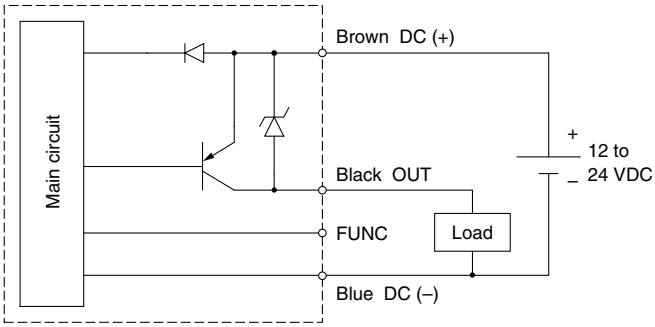

Max. 80 mA
Residual voltage 1 V or less

A

NPN (2 outputs)

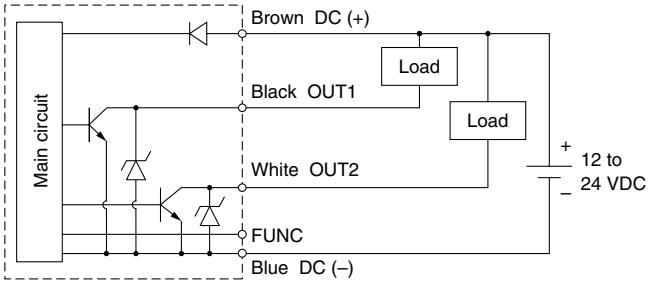

Max. 28 V, 80 mA
Residual voltage 1 V or less

B

PNP (2 outputs)

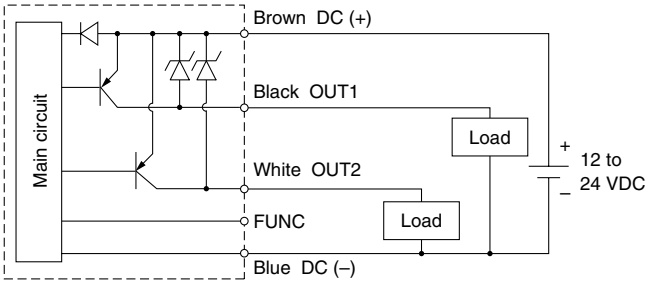

Max. 80 mA
Residual voltage 1 V or less

Note) The FUNC terminal is connected using a dedicated lead wire (ZS-38-5L or ZS-38-U) when the copy function is used. (Refer to “Copy function” on page 10.)

C

NPN (1 output) + Analogue voltage output

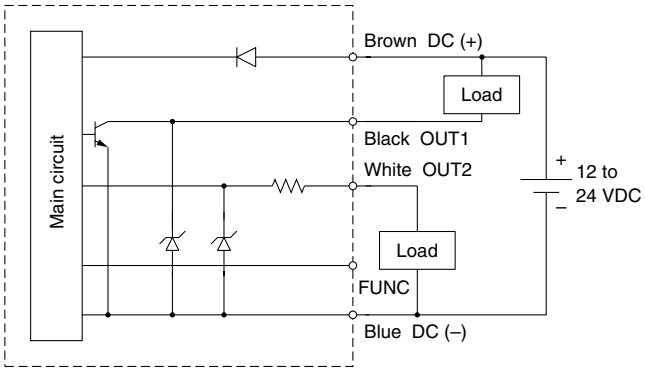

Max. 28 V, 80 mA
Residual voltage 1 V or less

Analogue voltage output
Output impedance: Approx. 1 kΩ

E

PNP (1 output) + Analogue voltage output

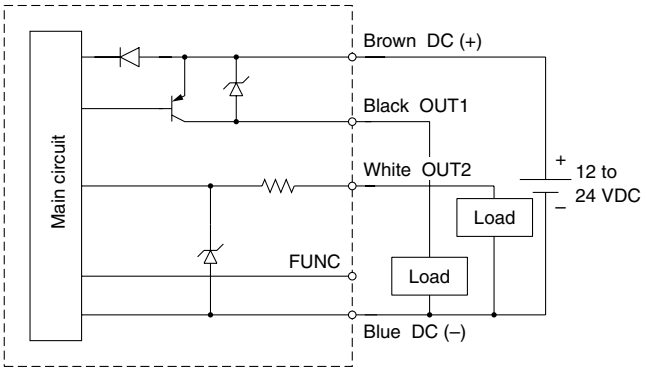

Max. 80 mA
Residual voltage 1 V or less

Analogue voltage output
Output impedance: Approx. 1 kΩ

D

NPN (1 output) + Analogue current output

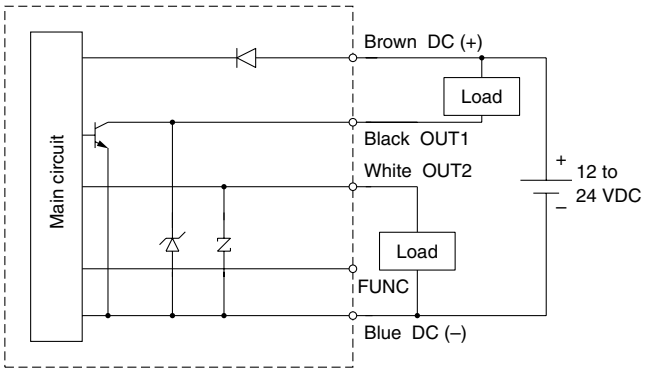

Max. 28 V, 80 mA
Residual voltage 1 V or less

Analogue current output
Max. load impedance:
Power supply voltage 12 V: 300 Ω
Power supply voltage 24 V: 600 Ω
Min. load impedance: 50 Ω

F

PNP (1 output) + Analogue current output

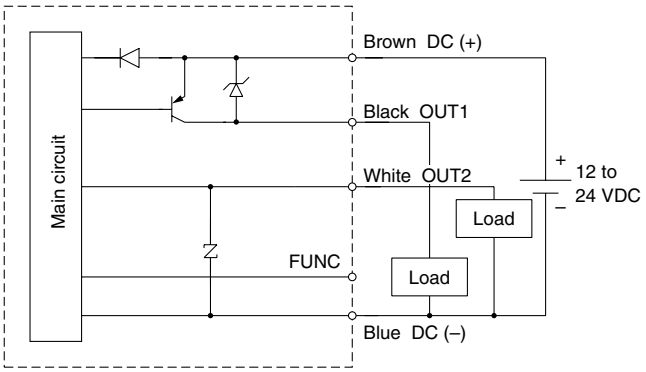

Max. 80 mA
Residual voltage 1 V or less

Analogue current output
Max. load impedance:
Power supply voltage 12 V: 300 Ω
Power supply voltage 24 V: 600 Ω
Min. load impedance: 50 Ω

Note) The FUNC terminal is connected using a dedicated lead wire (ZS-38-5L or ZS-38-U) when the copy function is used. (Refer to “Copy function” on page 10.)

Dimensions

Z/ISE30A(F) – ■ – □ – □□□□

Piping

01 / N01

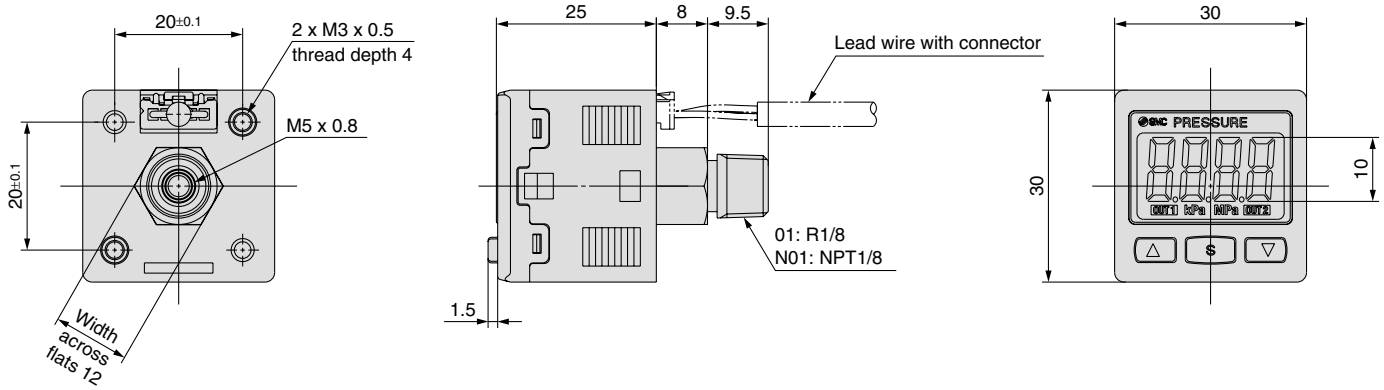

C4H

One-touch fitting ø4 mm ø5/32 inch straight

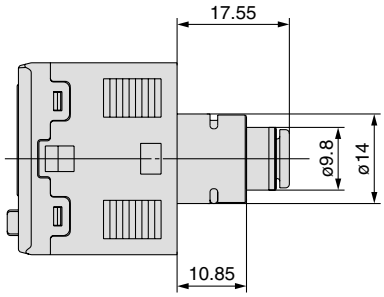

C6H

One-touch fitting ø6 mm straight

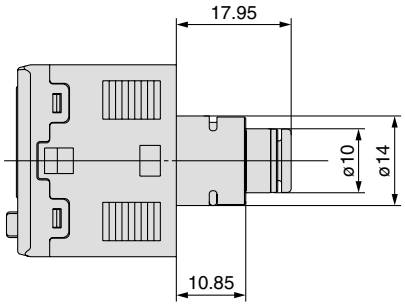

N7H

One-touch fitting ø1/4 inch straight

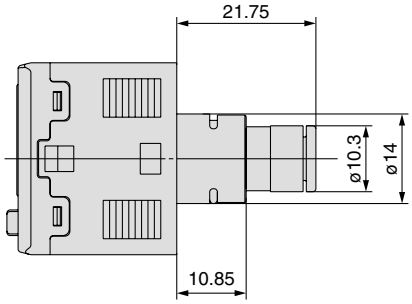

C4L

One-touch fitting ø4 mm ø5/32 inch elbow

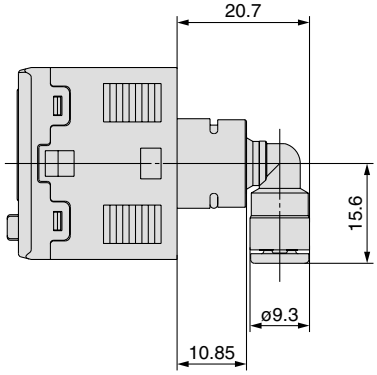

C6L

One-touch fitting ø6 mm elbow

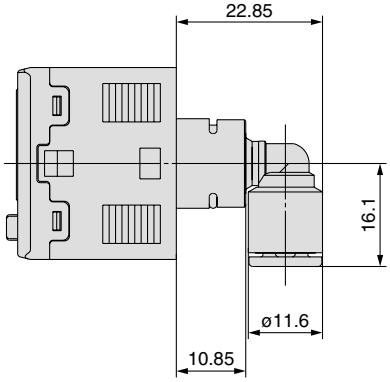

N7L

One-touch fitting ø1/4 inch elbow

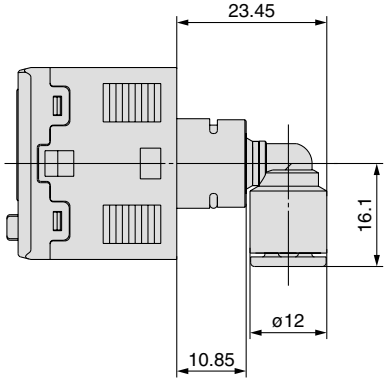

With bracket

Z/ISE30A(F) –□–□–□□■□

Option 2

A1

Bracket A
(Option unit part no.: ZS-38-A1)

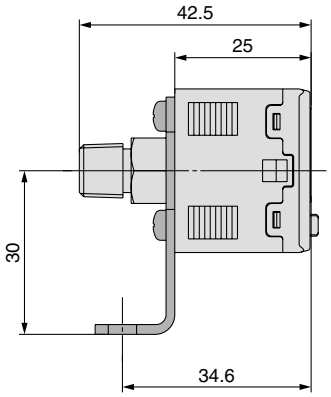

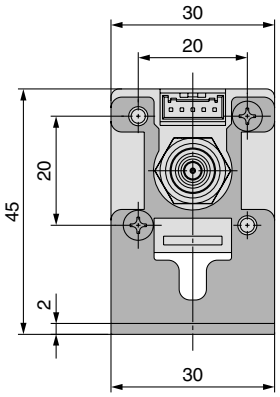

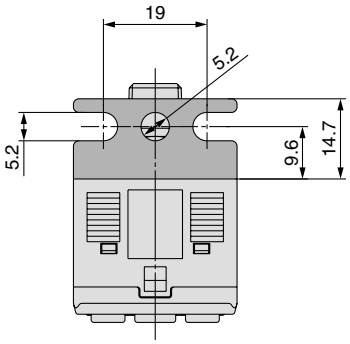

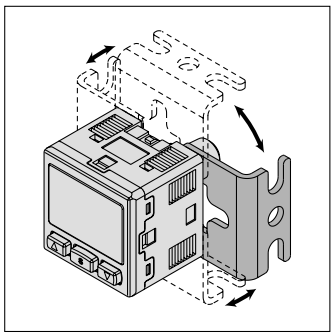

Note) Bracket configuration allows mounting in four directions.

A2

Bracket B
(Option unit part no.: ZS-38-A2)

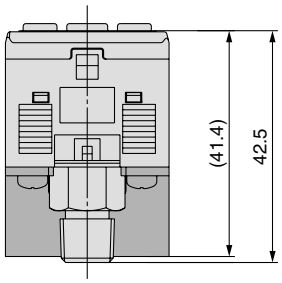

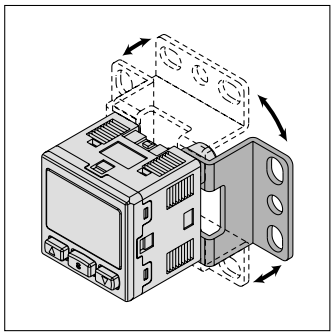

Note) Bracket configuration allows mounting in four directions.

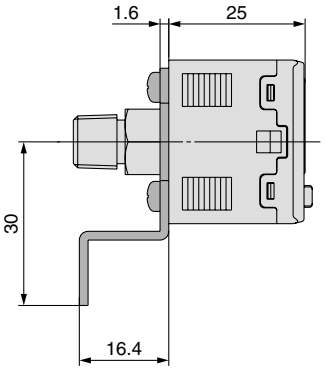

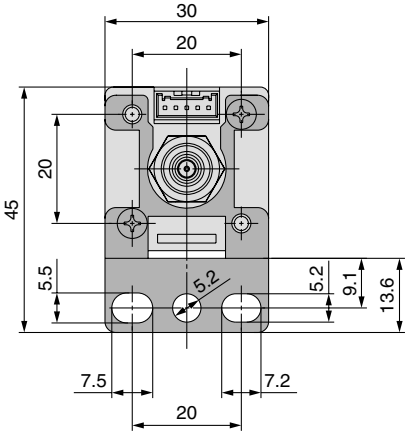

Dimensions

Panel mount

Z/ISE30A(F) –□–□–□□■□

Option 2

B

Panel mount adapter
(Option unit part no.: ZS-27-C)

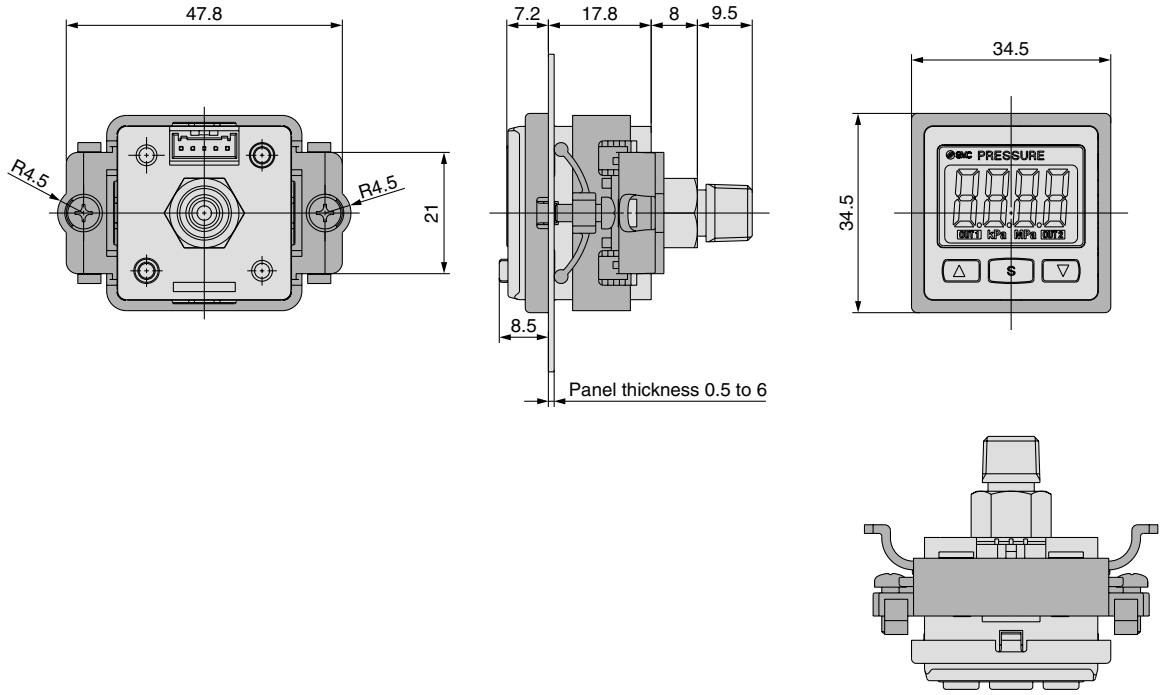

D

Panel mount adapter + Front protection cover
(Option unit part no.: ZS-27-D)

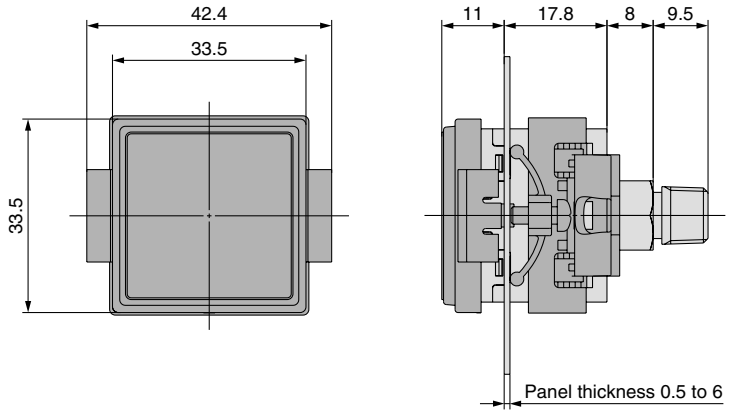

Panel fitting dimensions

1 pc. mounting

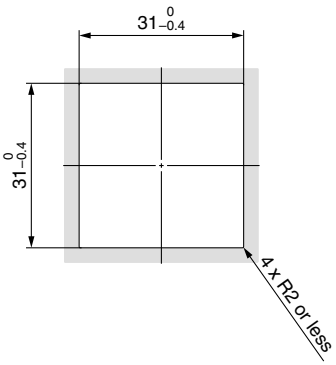

Multiple (2 pcs. or more) horizontal mounting

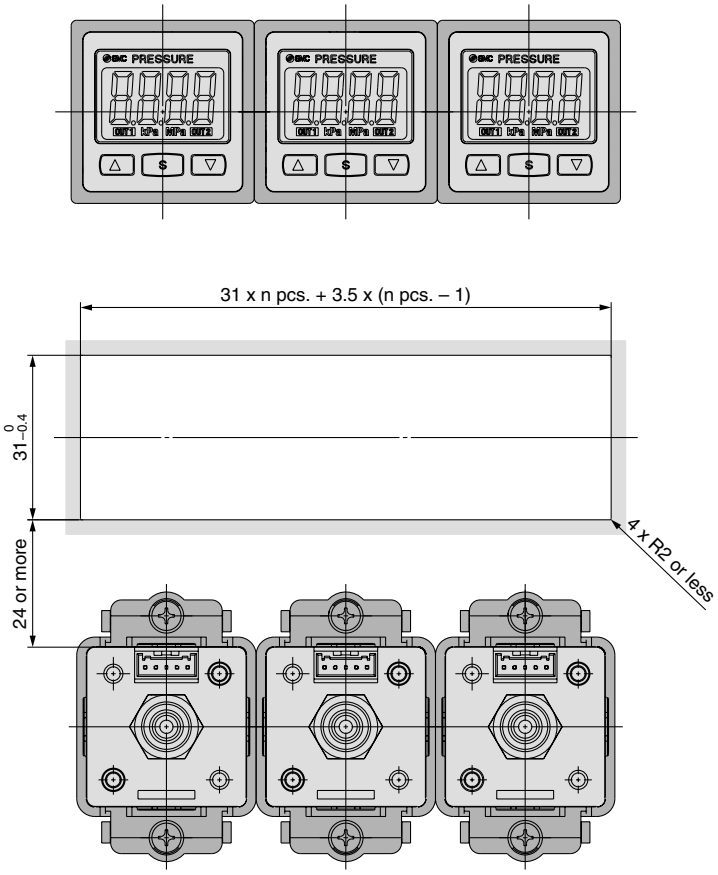

Multiple (2 pcs. or more) vertical mounting

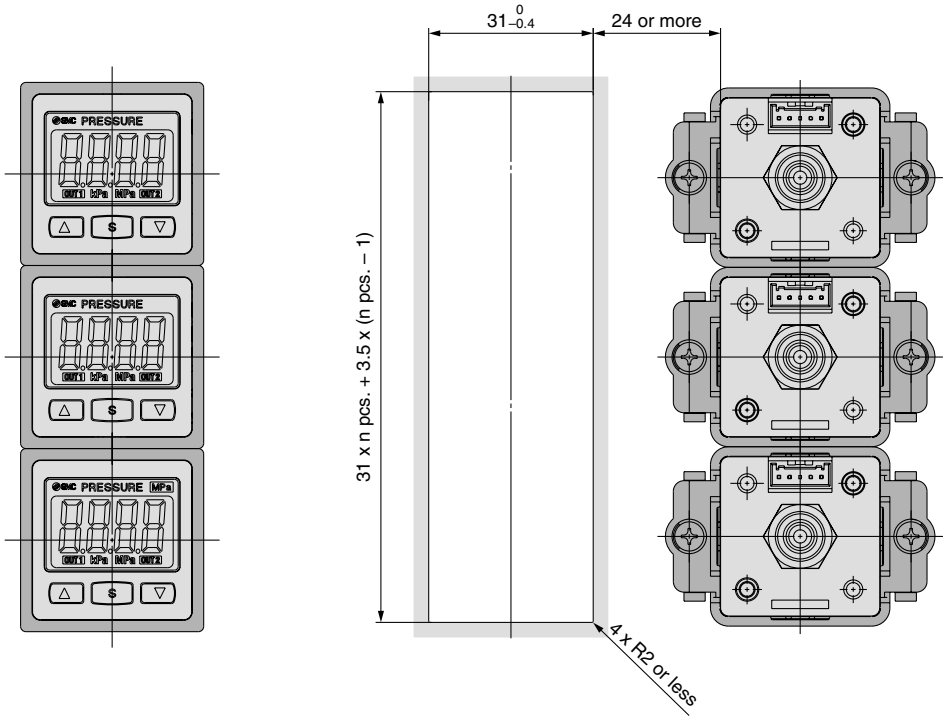

Function Details

A Copy function (F97)

The settings of the master sensor can be copied to several slave sensors, which reduces the time taken for setting and prevents the input of wrong values.

Settings can be copied to up to 10 slave sensors at once.
(Max. transmission distance: 4 m)

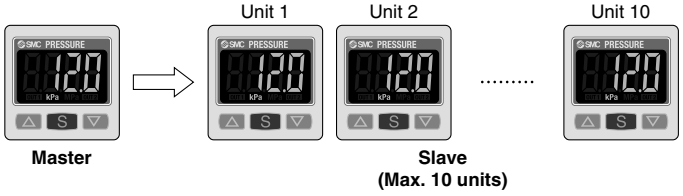

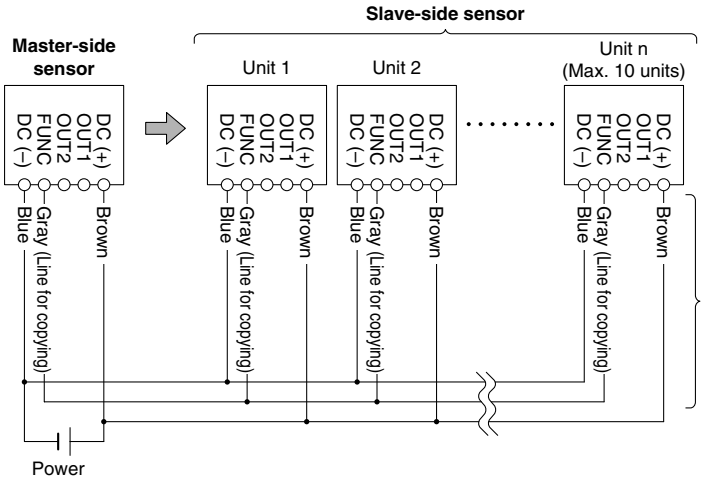

Steps to follow:

1) The sensors are connected by a dedicated lead wire (ZS-38-5L for master and one slave or ZS-38-U for master and up to 10 slaves). Copying is performed through a dedicated communication line.
2) Force one sensor to be the master by button operation initially all sensors are set as slaves.
3) Press the S button on the master sensor to start copying.

B Auto-preset function (F5)

Auto-preset function, when selected in the setting, calculates and stores the set-value from the measured pressure.
The optimum set-value is determined automatically by repeating vacuum and break with the target workpiece several times.

Suction Verification

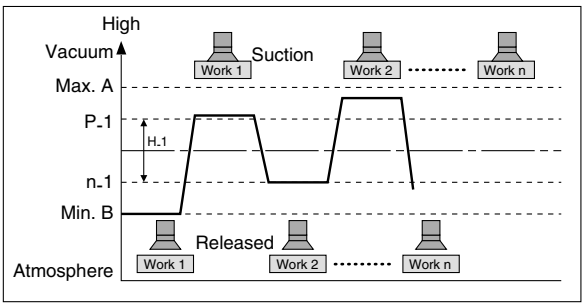

Formula for Obtaining the Set-Value

P_1 or P_2	H_1 or H_2
P_1 (P_2) = A – (A-B)/4 n_1 (n_2) = B + (A-B)/4	H_1 (H_2) = (A-B)/2

C Precision indicator setting function (F6)

Fine adjustment of the indicated value of the pressure sensor can be made within the range of ±5% of the read value. The scattering of the indicated value can be eliminated.

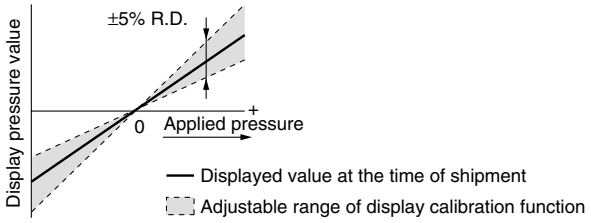

Note) When the precision indicator setting function is used, set pressure value may change ±1 digit.

D Peak and bottom display function

This function constantly detects and updates the maximum minimum value and allows to hold the maximum/minimum pressure value.
When the △ ▽ buttons are simultaneously pressed for 1 second or longer, while "holding", the held value will be reset.

E Key lock function

This function prevents incorrect operations such as accidentally changing the set-value.

F Zero-out function

This function clears and resets the zero value on the display of measured pressure.
For the pressure switch with analogue output, the analogue output shifts according to the indication. A displayed value can be adjusted within ±7% F.S. of the pressure when ex-factory (±3.5% F.S. for ZSE30AF).

F□ in brackets stand for the function codes. Refer to the operating manual for how to operate and function codes in detail.

G Error indication function

Error description	Error code (LCD display)	Condition	Solution
Overcurrent error	Er 1	Load current of switch output (OUT1) exceeds 80 mA.	Shut off the power supply. After eliminating the output factor that caused the excess current, turn the power supply back on.
	Er2	Load current of switch output (OUT2) exceeds 80 mA.	
Residual pressure error	Er3	A pressure of ±7% F.S. of atmospheric pressure is applied in the zero-out function (±3.5% F.S. or more for ZSE30AF). however, the switch will automatically return to measuring mode in 1 second. Due to individual product differences, the setting range of the zero-out function varies within ±1% F.S.	Bring the pressure back to atmospheric pressure and try using the zero-out function.
Applied pressure error	HHH	Supply pressure exceeds the maximum regulating pressure.	Reduce/increase supply pressure to within the regulating pressure range.
	LLL	Supply pressure is below the minimum regulating pressure.	
System error	Er0	Internal data error	Shut off the power supply and turn the power supply back on. If the power does not come back on, please contact SMC for an inspection.
	Er4		
	Er6		
	Er7		
	Er8		
	Er9		

If the switch does not recover to normal even after all of the above-mentioned solutions have been applied, consult SMC for investigation.

H Anti-chattering function (F3)

A large bore cylinder or ejector consumes a large volume of air in operation and may experience a temporary drop in the supply pressure. This function prevents detection of such temporary drops in the supply pressure as an error.

Available response time settings
20 ms, 100 ms, 500 ms, 1000 ms, 2000 ms

Principle
This function averages pressure values measured during the response time set by the user and then compares the average pressure value with the pressure set point value to output the result on the switch.

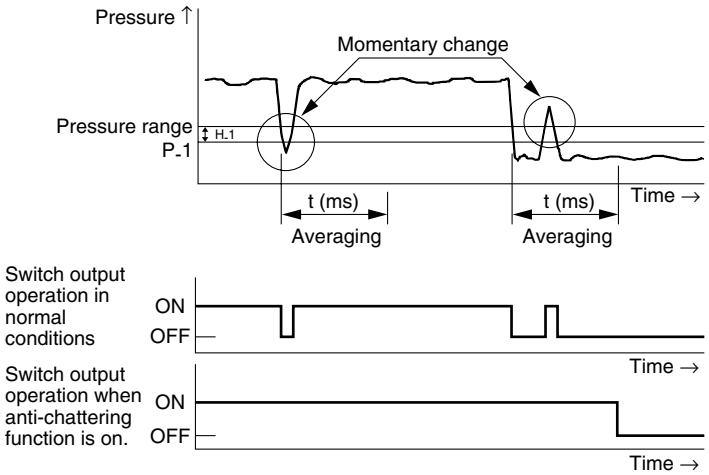

I Unit display switching function (F0)

Display units can be switched with this function.

Display unit / Min. unit setting	PA		GF	bAr	PSi	inH	mmH
	kPa	MPa[Note)]	kgf/cm²	bar	psi	inHg	mmHg
ZSE30A (Vacuum pressure)	0.1	0.001	0.001	0.001	0.01	0.1	1
ZSE30AF (Compound pressure)	0.1	0.001	0.001	0.001	0.01	0.1	1
ISE30A (Positive pressure)	1	0.001	0.01	0.01	0.1		

Note) For the ZSE30A (vacuum pressure) and ZSE30AF (compound pressure), when the display unit is MPa, setting and display resolutions are changed.

J Power-saving mode (F7)

It shifts to the power-saving mode without button operation for 30 seconds. It is set to the normal mode (power-saving mode is OFF) when ex-factory (decimal points and operation indicator light, only when the switch output is turned ON, blink in the power-saving mode.

K Secret code setting (F8)

It can be set whether code number input is required or not when key is locked. It is set to input no code number when ex-factory.

Safety Instructions

These safety instructions are intended to prevent hazardous situations and/or equipment damage. These instructions indicate the level of potential hazard with the labels of **"Caution," "Warning"** or **"Danger."** They are all important notes for safety and must be followed in addition to International Standards (ISO/IEC), Japan Industrial Standards (JIS) Note 1) and other safety regulations Note 2).

Note 1) ISO 4414: Pneumatic fluid power – General rules relating to systems.
ISO 4413: Hydraulic fluid power – General rules relating to systems.
IEC 60204-1: Safety of machinery – Electrical equipment of machines. (Part 1: General requirements)
ISO 10218-1992: Manipulating industrial robots -Safety.
JIS B 8370: General rules for pneumatic equipment.
JIS B 8361: General rules for hydraulic equipment.
JIS B 9960-1: Safety of machinery – Electrical equipment of machines. (Part 1: General requirements)
JIS B 8433-1993: Manipulating industrial robots - Safety.
etc.
Note 2) Labor Safety and Sanitation Law, etc.

⚠ Caution: Operator error could result in injury or equipment damage.

⚠ Warning: Operator error could result in serious injury or loss of life.

⚠ Danger : In extreme conditions, there is a possibility of serious injury or loss of life.

⚠ Warning

1. The compatibility of the product is the responsibility of the person who designs the equipment or decides its specifications.

Since the product specified here are used under various operating conditions, their compatibility with the specific equipment must be based on specifications based or after analysis and or test results. The expected performance and safety assurance of the equipment will be the responsibility of the person who has determined its compatibility with the product. This person should also continuously review all specifications of the product referring to its latest catalog information, with a view to giving due consideration to any possibility of equipment failure when configuring the equipment.

2. Only trained personnel should operate machinery and equipment.

The product specified here may become unsafe if handled incorrectly. The assembly, operation and maintenance of machines or equipment including our products must be performed by an operator who is appropriately trained and experienced.

3. Do not service or attempt to remove components and machinery/equipment until safety is confirmed.

1. Inspection and maintenance of machinery/equipment should only be performed after confirmation of safe locked-out control positions.
2. When the product is to be removed, confirm that the safety process as mentioned above are implemented and the power from any appropriate source is cut, and read/understand the specific product precautions carefully.
3. Before machinery/equipment is restarted, take measures to prevent unexpected operation and malfunction.

4. Contact SMC if the product is to be used in any of the following conditions.

1. Conditions and environments beyond of the given specifications, or if product is used outdoors.
2. Installation on equipment in conjunction with atomic energy, railways, air navigation, space, shipping, vehicles, military, medical treatment, combustion and recreation, food and beverages, emergency stop circuits, press applications, safety equipment or other applications unsuitable for the standard specifications described in the product catalogue.
3. An application which could have negative effects on people, property, or animals and therefore requires special safety analysis.
4. Use in an interlock circuit, which requires the provision of double interlock for possible failure by using a mechanical protective function, and periodical checks to confirm proper operation.

Safety Instructions

⚠Caution

The product is provided for use in manufacturing industries.
The product herein described is basically provided for peaceful use in manufacturing industries.
If considering using the product in other industries, consult SMC beforehand and exchange specifications or a contract if necessary. If anything is unclear, contact your nearest sales branch.

Limited Warranty and Disclaimer/Compliance Requirements

The product used is subject to the following “Limited Warranty and Disclaimer” and “Compliance Requirements”. Read and accept them before using the product.

Limited Warranty and Disclaimer

1. **The warranty period of the product is 1 year in service or 1.5 years after it is delivered.Note)**
   The product may also have specified durability, running distance or replacement parts. Please consult your nearest sales point.
2. **For any failure or damage reported within the warranty period which is clearly SMC's responsibility, replacement product/parts will be provided.**
   This limited warranty applies only to SMC's product independently, and not to any other damage incurred due to the failure of it.

Note) Vacuum pads are excluded from this 1 year warranty.
A vacuum pad is a consumable part, so it is warranted for a year after is deliver.
Also, even within the warranty period, the wear of a product due to the use of the vacuum pad or failure due to the deterioration of rubber material are not covered by the limited warranty.

Compliance Requirements

When the product is exported, strictly follow the laws required by the Ministry of Economy, Trade and Industry (Foreign Exchange and Foreign Trade Control Law).

Series ZSE30A(F)/ISE30A
Specific Product Precautions 1

Be sure to read this before handling.
Refer to the back of pages 1 and 2 for Safety Instructions and "Precautions for Handling Pneumatic Devices" (M-03-E3A) for Pressure Switches Precautions.

Handling

⚠ Warning

1. **Do not drop, bump, or apply excessive impacts (100 m/s²) while handling. Although the body of the pressure switch may not be damaged, the internal parts of the pressure switch could be damaged and lead to a malfunction.**
2. **The tensile strength of the cord is 35 N. Applying a greater pulling force on it can cause a malfunction. When handling, hold the body of the sensor—do not dangle it from the cord.**
3. **Do not exceed the screw-in torque of 7 to 9 N·m when installing piping. Exceeding these values may cause malfunctioning of the switch.**
4. **Do not use pressure switch with corrosive and/or flammable gases or liquids.**
5. **Allow a sufficient margin of tube length in piping in order to prevent application of torsional, tensile or moment load to the tubes and fittings.**
6. **When a brand of tubing other than SMC is used, make sure that the tolerance of the tube's O.D. satisfies following specifications:.**
   1) Nylon tubing: ±0.1 mm or less
   2) Soft nylon tubing: ±0.1 mm or less
   3) Polyurethane tubing: +0.15 mm or less, –0.2 mm or less
7. **The applicable fluid is air. Consult SMC if the**

Connection

⚠ Warning

1. **Incorrect wiring can damage the switch and cause a malfunction or erroneous switch output. Connections should be done while the power is turned off.**
2. **Do not attempt to insert or pull the connector when the power is on. A switch output malfunction may occur.**
3. **Wire separately from power lines and high voltage lines, avoiding wiring in the same conduit with them. Malfunctions may occur due to noise from these other lines.**
4. **If a commercial switching regulator is used, make sure that the F.G. terminal is grounded.**

Operating Environment

⚠ Warning

1. **SMC pressure switches are CE marked; however, they are not equipped with surge protection against lightning. Lightning surge countermeasures should be applied directly to system components as necessary.**
2. **SMC pressure switches do not have an explosion proof rating. Never use in the presence of an explosive gas as this may cause a serious explosion.**
3. **Do not use in an environment where static electricity can cause problems, otherwise system failure**

Mounting

⚠ Caution

1. **Mounting/removing with panel mount adapter**

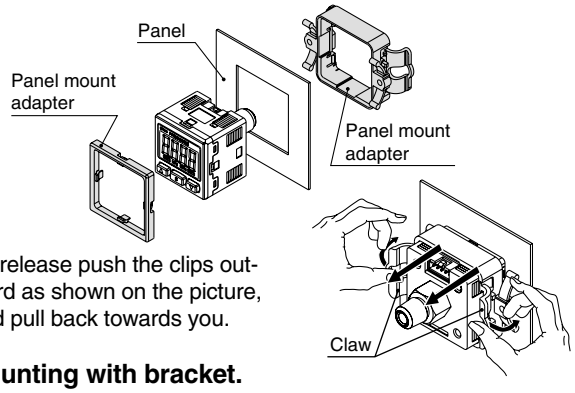

To release push the clips outward as shown on the picture, and pull back towards you.

2. **Mounting with bracket.**
   - Mount a bracket to the using two M3 x 5L mounting screws and install on piping. The switch can be installed horizontally depending on the installation location.

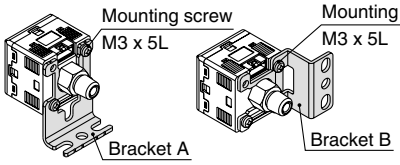

Tightening torque for bracket mounting screw should be 0.5 to 0.7 N·m.

   - When using bracket B, take piping dimensions into consideration for installation.

Connection/Removal of Connector

- To connect the connector, insert it straight while pinching the lever, and then push the lever into the jack of the housing and lock it.
- To remove the connector, pull it straight out while applying pressure with your thumb to the lever and unhooking it from the jack.

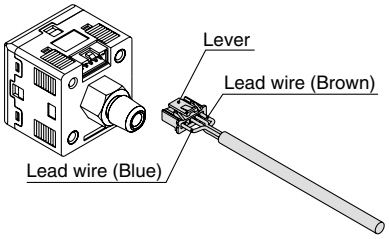

- Do not attempt to insert or pull the pressure sensor or its connector when the power is on. A switch output malfunction may occur.

Piping

- Cut the tube perpendicularly.
- Hold the tube and insert it into the one-touch fitting carefully and securely all the way to the bottom.

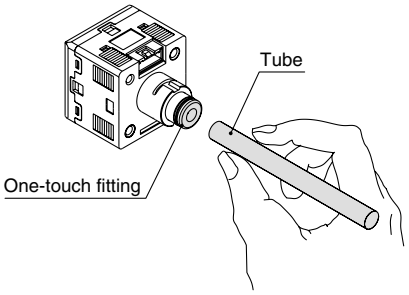

Series ZSE30A(F)/ISE30A
Specific Product Precautions 2

Be sure to read before handling.
Refer to the back of pages 1 and 2 for Safety Instructions and "Precautions for Handling Pneumatic Devices" (M-03-E3A) for Pressure Switches Precautions.

Set Pressure Range and Rated Pressure Range

⚠ Caution

Set the pressure within the rated pressure range.
The set pressure range is the range of pressure that is possible to be set.
The rated pressure range is the range of pressure that satisfies the specifications (accuracy, linearity, etc.) on the switch.
Although it is possible to set a value outside the rated pressure range, the specifications will not be guaranteed (even if the value stays within the set pressure range).

Switch		Pressure range
		–100 kPa, 0, 100 kPa, 500 kPa, 1 MPa
For vacuum pressure	**ZSE30A**	–101 kPa – 0 –105 kPa – 10 kPa
For com-pound pressure	**ZSE30AF**	–100 kPa – 100 kPa –105 kPa – 105 kPa
For positive pressure	**ISE30A**	–100 kPa – 1 MPa –105 kPa (–0.105 MPa) – 1.05 MPa

Rated pressure range of switch
Set pressure range of switch