HOMECLICK WOOD

180 x 80 x 30 cm. COLOR Mini 5-300

Simon Rack

360°

750 KG

CAPACIDAD TOTAL de la ESTANTERÍA -- GESAMTTRAGFÄHIGKEIT REGAL -- CAPACIDADE TOTAL da PRATELEIRA -- CAPACITÀ TOTALE dello SCAFFALE -- SHELF LOAD CAPACITY de l'ÉTAGÈRE -- CAPACITÉ TOTAL

4 x 180 cm.

5 x 30 x 80 cm.

4 x 30 cm.

4 x 80 cm.

6 x 30 cm.

6 x 80 cm.

4 x

VIDEO INSTRUCTIONS

PINK/WHITE

8 435104 962046

www.simonrack.com

www.simonrack.com MADE IN SPAIN

EPOXY POLIESTER

EMPRESA CERTIFICADA EN SISTEMA DE GESTIÓN DE CALIDAD ISO 9001:2015

INSTRUCTIONS

Simon Rack
SINCE 1964 - MANUFACTURER

1

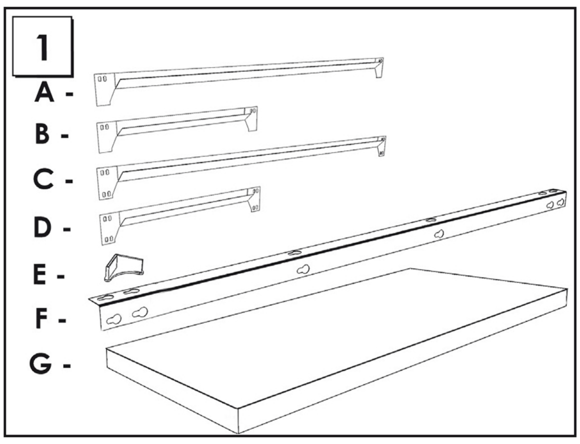

2

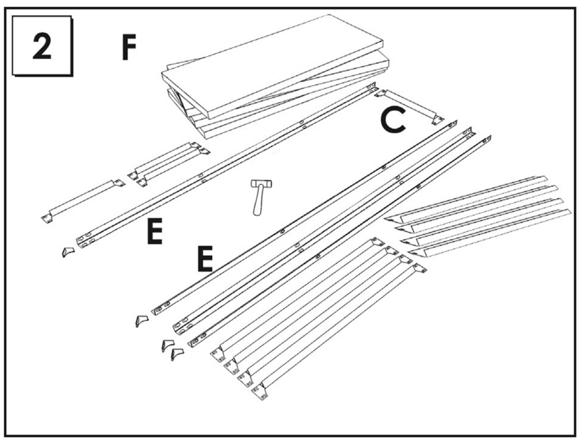

3

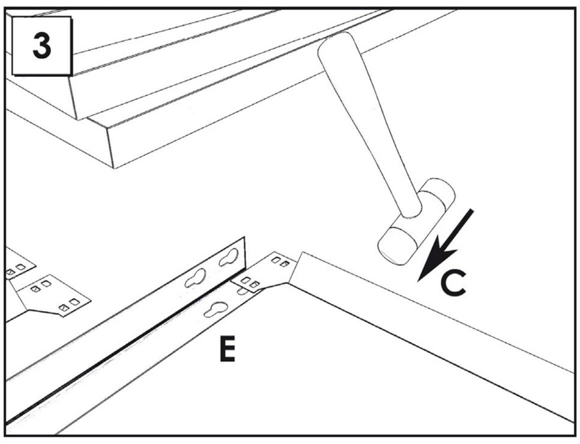

4

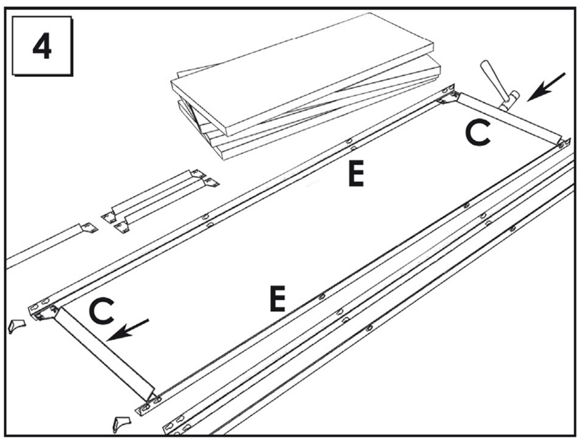

5

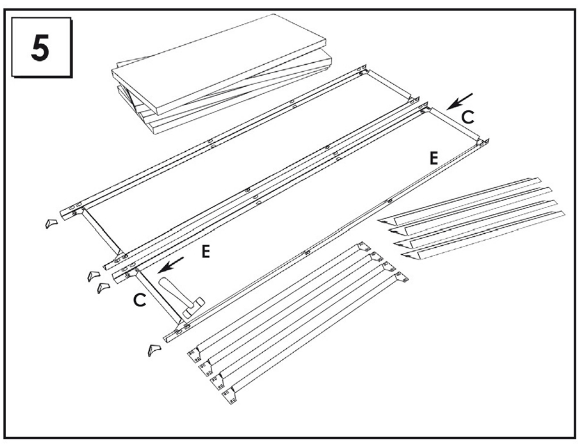

6

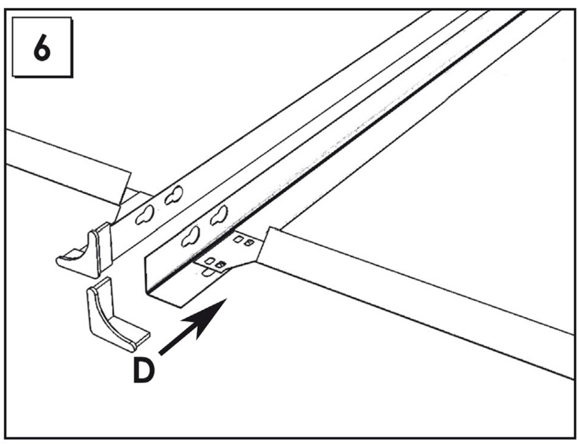

7

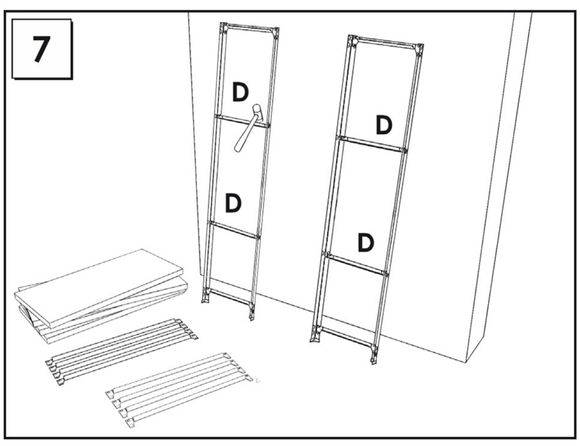

8

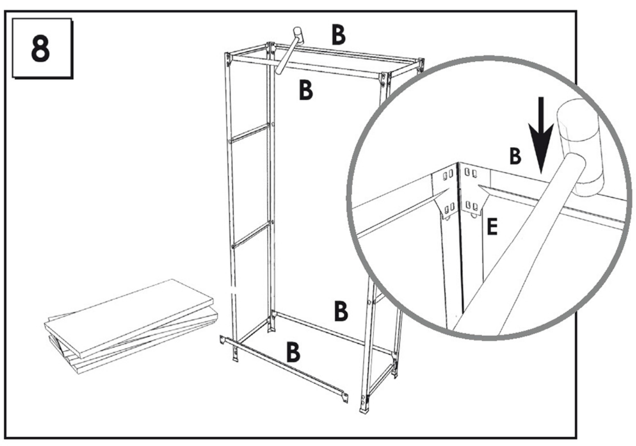

9

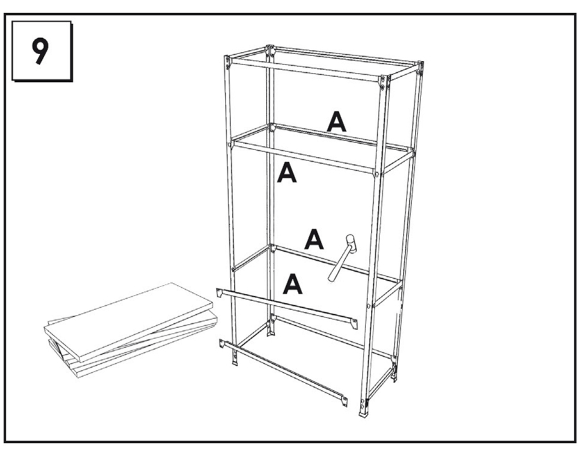

10

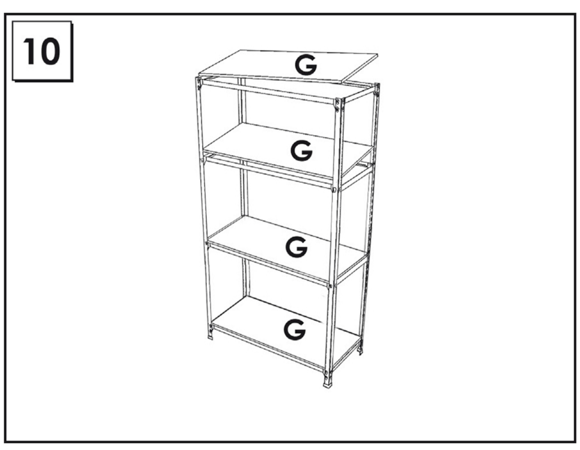

www.instructionsrack.com/homeclickwoodcolor

www.simonrack.com • www.simonrack.com • www.simonrack.com • www.simonrack.com • www.simonrack.com • www.simonrack.com • www.simonrack.com • www.simonrack.com • www.simonrack.com • www.simonrack.com

SIMONCLASSIC

150 kg
350 lb

SIMONCLICK

400 kg
900 lb

SIMONTALLER

700 kg
1550 lb

SIMONAUTO

300 kg
660 lb

SIMONWORK

800 kg
1800 lb

SIMONLOCKER

SIMONOFFICE

275 kg
600 lb

SIMONHOME

150 kg
350 lb

SIMONGARDEN

600 kg
1350 lb

SIMONTITÁN

900 kg
1990 lb

SIMONINOX

SIMONINDUSTRIAL

SIMONPALET

4500 kg
9950 lb

SIMONLEVER

ALTILLOS Y PASILLOS ELEVADOS
PLATFORMS AND MEZZANINES
LAGERBÜHNEN • PLATES-FORMES ET MEZZANINES

* Kg / lb por bandeja con carga uniformemente repartida
Kg / lb per shelf uniformly distributed load
Kg / lb pro fach bei gleichmäßig verteilter last
Kg / lb par plateau avec charge uniformément répartie