Data Sheet

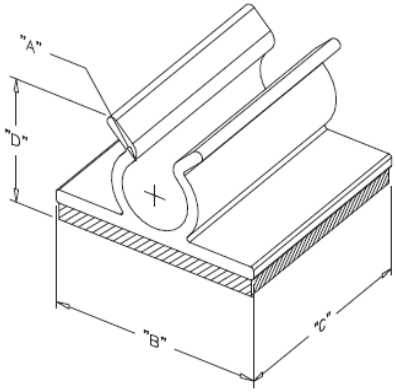

Part No.	B/N (Transparent)	B/N (Grey)	Cable Capacity øA(mm) max.	B(mm)	C(mm)	D(mm) max.
RCC-032	1572722	1571399	3.2	19	19	7.1
RCC-064	1568972	1572175	6.4	19	19	11.9
RCC-095	1568973	1566905	9.5	19	19	15.1
RCC-127	1568974	1570188	12.7	25	25	17.5
RCC-191	1568975		19.1	25	25	23

Material : PVC
Plated : Grey

DATE	REVISION	APPROVAL BY

DIMENSION	mm ± 0.5
DRAW BY	
APPROVAL BY	
DATE	30-06-2011

Name	Round Cable Clips