DRAPER®

GB

230V 1/3 SHEET

SANDER

57839 - 1/3S-260D SPARE PARTS DRAWING

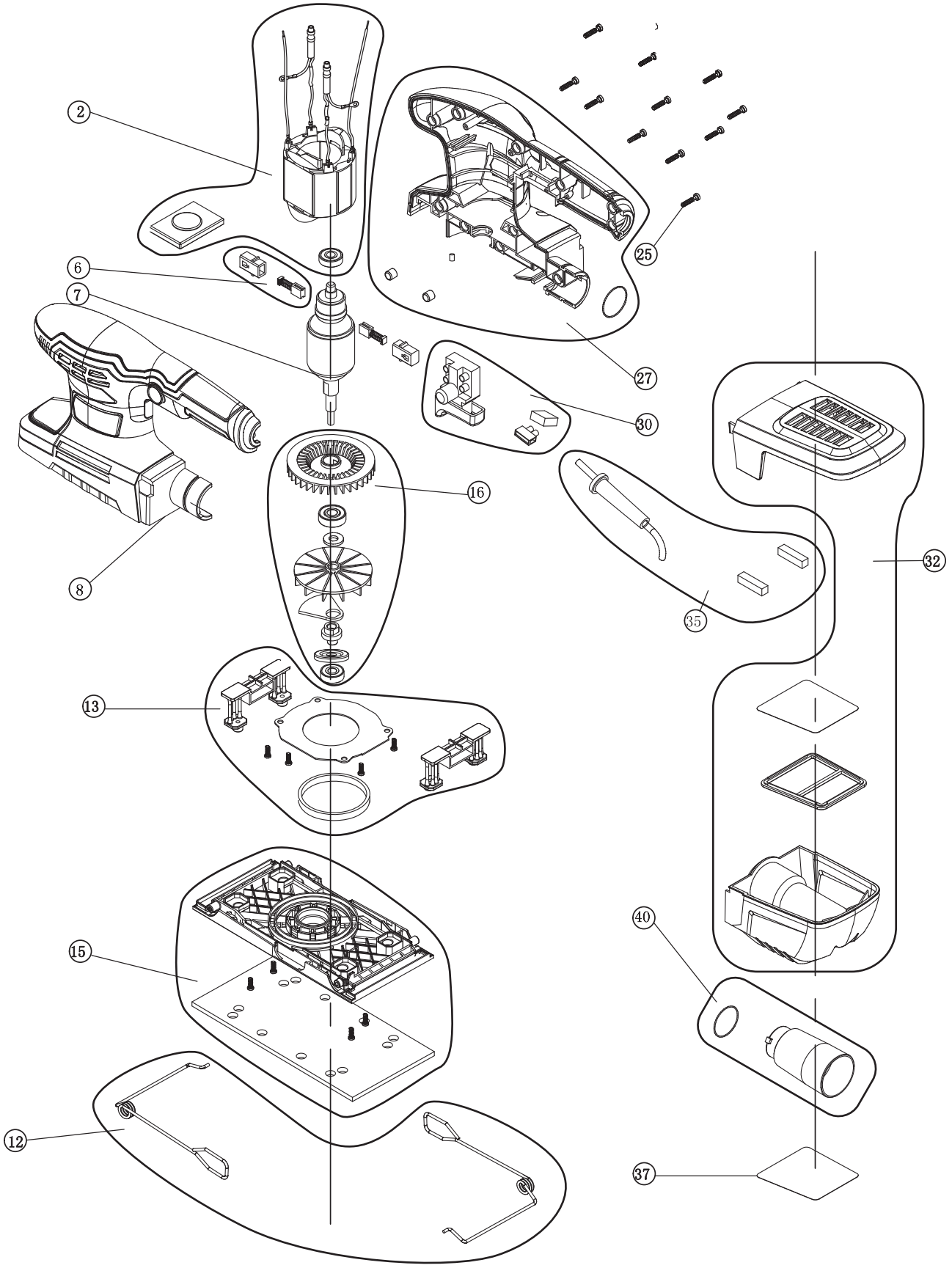

Helpline: +44 (0) 23 8049 4344 Sales Desk: +44 (0) 23 8049 4333 General Enquiries: +44 (0) 23 8026 6355 internet: drapertools.com email: sales@drapertools.com

Draper Tools Limited, Hursley Road, Chandler's Ford, Eastleigh, Hampshire. SO53 1YF UK.

DRAPER®

GB

230V 1/3 SHEET

SANDER

57839 - 1/3S-260D SPARE PARTS LISTING

KEY No.	PART No.	STOCK No.	DESCRIPTION
2	Y1/3S-260D-2	97579	Stator assembly
6	Y1/3S-260D-6	97580	Carbon brush assembly (pair)
7	Y1/3S-260D-7	97583	Rotor
8	Y1/3S-260D-8	97584	Housing
12	Y1/3S-260D-12	97585	Paper clamp (pair)
13	Y1/3S-260D-13	97586	Plastic base assembly
15	Y1/3S-260D-15	97587	Soft pad
16	Y1/3S-260D-16	97588	Fan assembly
25	Y1/3S-260D-25	97589	Tapping screw ST3.9x19 (set)
27	Y1/3S-260D-27	97590	Housing II & parts
30	Y1/3S-260D-30	97591	Switch assembly
32	Y1/3S-260D-32	97592	Dust box
35	Y1/3S-260D-35	97593	Plug & cable
37	Y1/3S-260D-37	98224	Filter paper
40	Y1/3S-260D-40	98225	Dust extraction adaptor

KEY No.	PART No.	STOCK No.	DESCRIPTION

Helpline: +44 (0) 23 8049 4344 Sales Desk: +44 (0) 23 8049 4333 General Enquiries: +44 (0) 23 8026 6355 internet: drapertools.com email: sales@drapertools.com

Draper Tools Limited, Hursley Road, Chandler's Ford, Eastleigh, Hampshire. SO53 1YF UK.