Tous droits strictement reserves. Reproduction ou communication a des tiers interdite sous quelque forme que ce soit sans autorisation ecrite du propietaire. Propriete de©BERG ELECTRONICS. Droits de reproduction BERG ELECTRONICS INC.

All rights strictly reserved. Reproduction or issue to third parties in any form whatever is not permitted without written authority from the proprietor. Property of©BERG ELECTRONICS Copyright BERG ELECTRONICS INC.

Printed: Dec 14, 2006
STATUS: Released
PDM: Rev:T

PRODUCT NO.
SEE PRODUCT NUMBER CODE

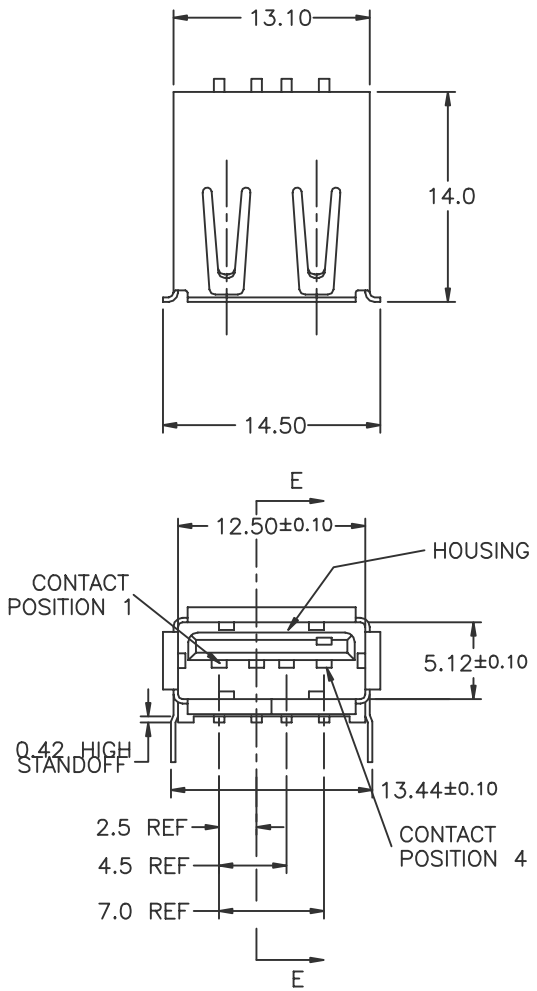

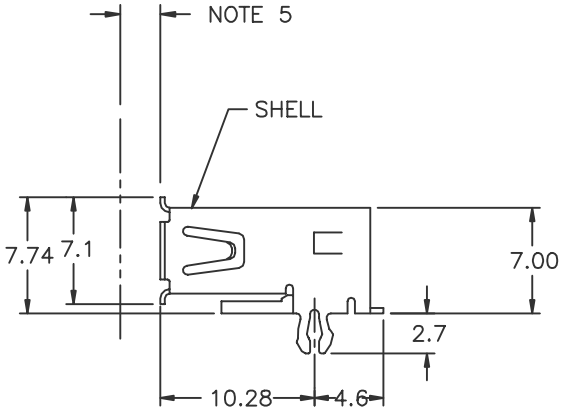

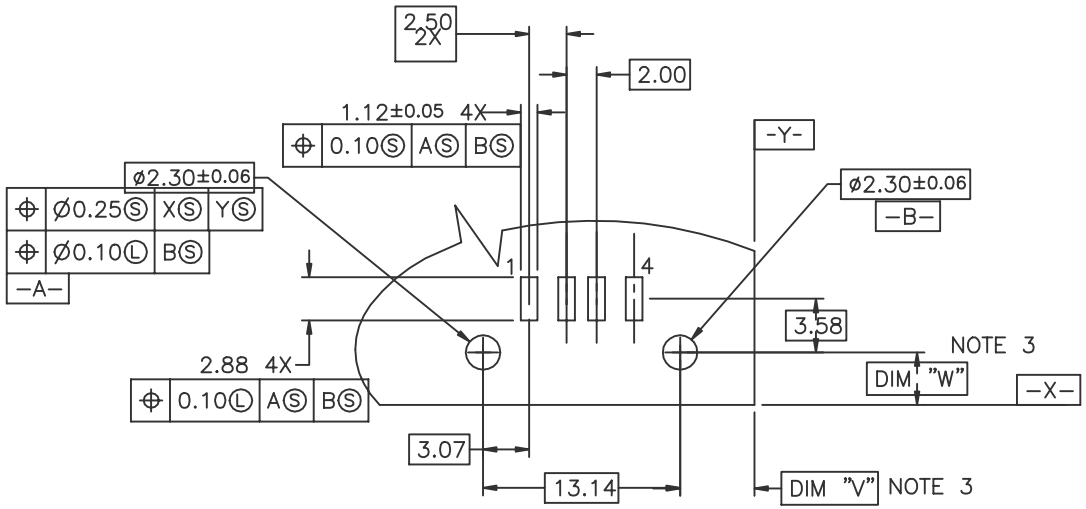

P.C. BOARD LAYOUT

NOTES:

1. MATERIAL:
   CONTACTS: COPPY ALLOY
   SHELL: COPPY ALLOY
   HOUSING: UL 94V-0 RATED THERMOPLASTIC
2. PLATING:
   CONTACTS: SEE P/N CODE
   SHELL: 2.5µm BRIGHT TIN OVER NICKEL UNDERPLATE
3. DATUM AND BASIC DIMENSIONS ESTABLISHED BY CUSTOMER
4. RECOMMENDED PC BOARD THICKNESS OF 1.57mm
5. 2.67mm MAXIMUM PANEL THICKNESS IF MOUNTED BEHIND PANEL
6. PRODUCT SPEC GS-12-095 & PACKAGING SPEC GS-14-393.
7. COMPLIED WITH USB 2.0 & TID NUMBER 60000205.
8. 87583-1010XX, AND -3010XX DURABILITY MEET 10000 CYCLES
   87583-5010XX DURABILITY MEET 5000 CYCLES. THE OTHER
   DASH NUMBER MEET USB 2.0 DURABILITY 1500 CYCLES

(TO BE CONTINUED ON PAGE 3)

mat'l. code NOTE 1 & 2				tolerances unless otherwise specified			CUSTOMER COPY	FCI www.fciconnect.com
ltr	ecn no	dr	date		.X ±.30			
N	N05-0031	PH	02/14/05	linear	.XX ±.20		projection	title UNIV. SERIAL BUS S.M. RECEPTACLE
P	N05-0068	PH	03/09/05		.XXX ±.10			
R	N05-0089	PH	03/24/05	angles	0° ±2°			
S	N06-0133	HB	05/22/06	dr	PETER	3/18/98	mm	product family USB / code –
T	N06-0258	HB	10/11/06	engr	R Y LIU	3/18/98		size A4 / dwg no 87583
				chr	R Y LIU	3/18/98	scale ---	
M	T04-0206	WL	05/13/04	appd	JENN TSAO	3/18/98		sheet 1 of 3

sheet index	revision sheet	T	P	N
		1	2	3

form no. 7530-001-103

cage code 22526

Tous droits strictement reserves. Reproduction ou communication a des tiers interdite sous quelque forme que ce soit sans autorisation ecrite du propietaire. Propriete de©BERG ELECTRONICS. Droits de reproduction BERG ELECTRONICS INC.

All rights strictly reserved. Reproduction or issue to third parties in any form whatever is not permitted without written authority from the proprietor. Property of©BERG ELECTRONICS Copyright BERG ELECTRONICS INC.

PRODUCT NO.
SEE PRODUCT NUMBER CODE

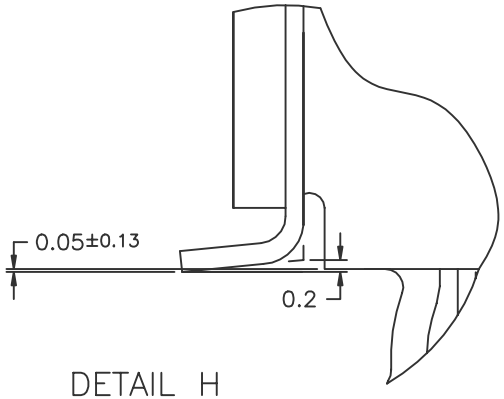

DETAIL H
SCALE 4X

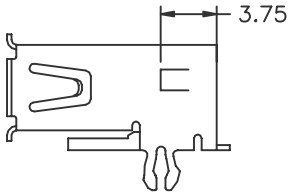

MEET DURABILITY 1500 CYCLES P/N:
87583-0010XX, -2010XX,-4010XX

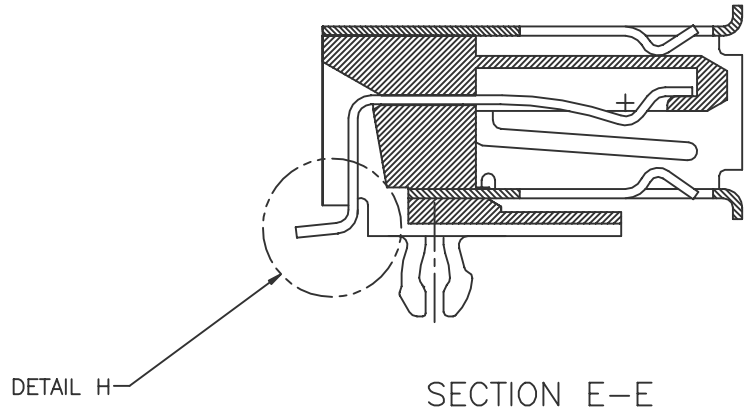

SECTION E-E
SCALE 2X

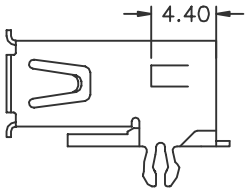

MEET DURABILITY 5000 OR 10000 CYCLES P/N:
87583-1010XX,-3010XX,-5010XX

mat'l. code NOTE 1 & 2				tolerances unless otherwise specified			CUSTOMER COPY	FCI www.fciconnect.com		
ltr	ecn no	dr	date	linear	.X ±.30		projection	title UNIV. SERIAL BUS S.M. RECEPTACLE		
P					.XX ±.20					
					.XXX ±.10					
				angles	0° ±2°					
				dr	PETER PAM	3/18/98	mm	product family USB		code –
				engr	R Y LIU	3/18/98		size A4	dwg no 87583	sheet 2 of
				chr	R Y LIU	3/18/98	scale 2:1			
				appd	JENN TSAO	3/18/98				
sheet index	revision sheet									

cage code 22526

form no. 7530-001-103

Printed: Dec 14, 2006

STATUS: Released

PDM: Rev:T

Tous droits strictement reserves. Reproduction ou communication a des tiers interdite sous quelque forme que ce soit sans autorisation ecrite du propietaire. Propriete de©BERG ELECTRONICS. Droits de reproduction BERG ELECTRONICS INC.

All rights strictly reserved. Reproduction or issue to third parties in any form whatever is not permitted without written authority from the proprietor. Property of©BERG ELECTRONICS Copyright BERG ELECTRONICS INC.

Printed: Dec 14, 2006
STATUS: Released
PDM: Rev:T

PRODUCT NUMBER CODE

87583 – X X X X X P A LF

BASE PRODUCT NUMBER

HOUSING COLOR OPTIONS

0 – WHITE+TIN OVER NICKEL UNDERPLATE
1 – BLACK+TIN OVER NICKEL UNDERPLATE
2 – WHITE+SHELL Ni PLATING ONLY
3 – BLACK+SHELL Ni PLATING ONLY
4 – WHITE+SHELL Ni PLATING & TIN LEAD ON PEGS;
WHITE+SHELL Ni PLATING FOR LEAD FREE OPTION
5 – BLACK+SHELL Ni PLATING & TIN LEAD ON PEGS;
BLACK+SHELL Ni PLATING FOR LEAD FREE OPTION

SHELL OPTION
0 – NO BACK SHIELD

MOUNTING HOLE OPTIONS
1 – NONE

TERMINAL PLATING OPTION
0 – 50u" Ni UNDERPLATE
30u" GXT CONTACT AREA
100u" TIN/LEAD TAIL AREA

PACKAGING OPTIONS
B – TUBES
R – TAPE & REEL

DATE CODE

FOR AUTOMOTIVE APPLICATION

LEAD FREE OPTION
IF LEAD FREE OPTION SELECTED, ALL ORIGINAL TIN/LEAD PLATING IS CHANGED TO PURE TIN PLATING

(CONTINUE)

9. P/N'S WITH SUFFIX "LF" ARE LEAD FREE P/N'S
10. FOR LEAD FREE P/N, THE PRODUCT MEET EUROPEAN UNION DIRECTIVES AND OTHER COUNTRY REGULATION AS DESCRIBED IN GS-22-008
11. THE HOUSING WILL WITHSTAND EXPOSURE TO 260°C PEAK TERMERATURE FOR 40 SECONDS IN A CONVECTION, INFRO-RED OR VAPOR PHASE REFLOW OVEN.
12. FOR AUTOMOTIVE APPLICATION: ALL THE TOLERANCES ".XX" ARE ±0.10 UNLESS OTHER SPECIAL NOTIFICATION

mat'l. code NOTE 1 & 2				tolerances unless otherwise specified			CUSTOMER COPY	FCI www.fciconnect.com
ltr	ecn no	dr	date	linear	.X ±.30		projection	title UNIV. SERIAL BUS S.M. RECEPTACLE
P					.XX ±.20			
					.XXX ±.10			
				angles	0° ±2°			
				dr	PETER	3/18/98	mm	product family USB / code –
				engr	R Y LIU	3/18/98		size A4 / dwg no 87583 / sheet 3 of
				chr	R Y LIU	3/18/98	scale ---	
				appd	JENN TSAO	3/18/98		
sheet index	revision sheet							cage code 22526

form no. 7530-001-103