REVISIONS		
ISS	ZONE	DESCRIPTION\PER REQUEST\DATE

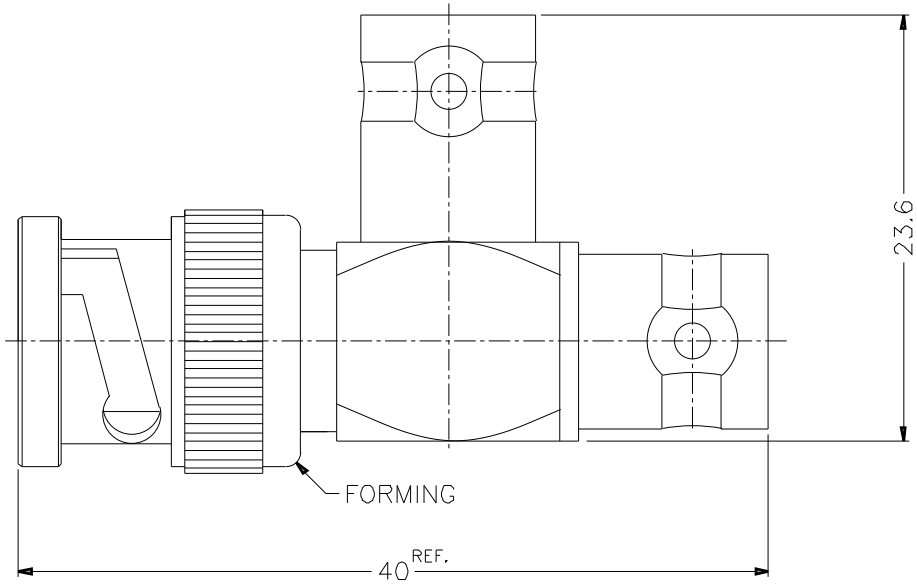

NOTES: FINISH (PLATING THICKNESS IN MICRO-INCHES)
1. BRASS PER QQ-B-626
2. NICKEL PL. 80 MIN. THICK OVER COPPER STRIKE
3. GOLD FLASH OVER NICKEL PL. 100 MIN. THICK OVER COPPER STRIKE

NO.	DESCRIPTION	MATERIAL	FINISH	Q'TY	DRAWING NO.
4	CONTACT PIN	NOTE 1	NOTE 3	1	
3	INSULATOR	DELRIN	NATURAL	1	
2	BODY	NOTE 1	NOTE 2	1	
1	SHELL	NOTE 1	NOTE 2	1	

DIMENSIONS ARE IN MILLIMETERS

UNLESS OTHERWISE SPECIFIED TOLERANCES
0.5-6 = ±0.2
6-30 = ±0.4
30-120 = ±0.6
120-315 = ±1
315-1000 = ±1.6
1000-2000 = ±2.4

SCALE 2.5/1 | ISSUE A

PART NO. OS-7078-NDG

APPROVED DATE 10-11-01'

CHECKED DATE 10-11-01'

DRAWN DATE 10-11-01'

FILE NO.

Amphenol

TITLE
BNC MALE TO DOUBLE BNC FEMALE

DRAWING NO.
OS-7078-NDG

ITEM NO