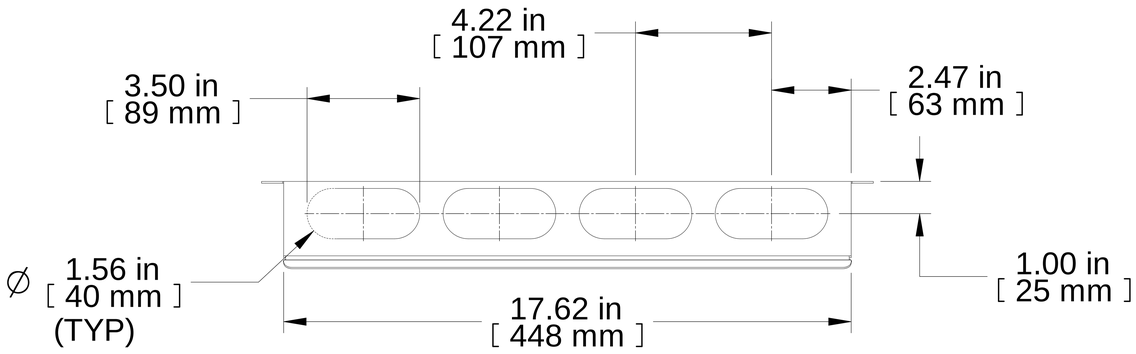

TOP VIEW

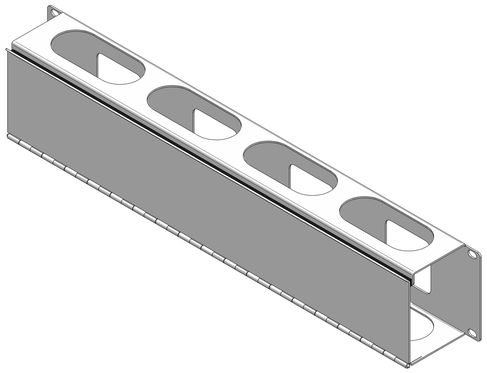

ISOMETRIC VIEW

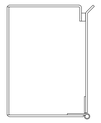

L.H. SIDE VIEW

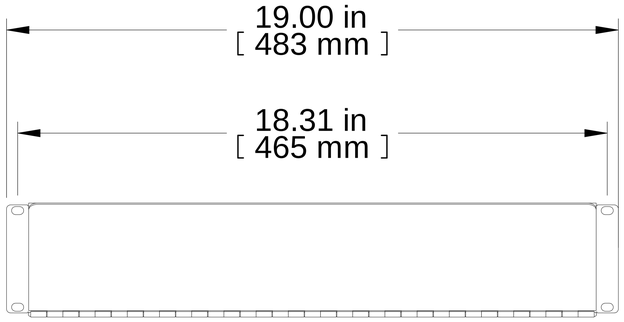

FRONT VIEW

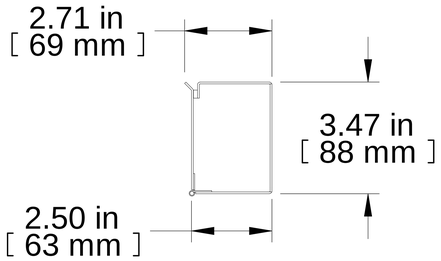

R.H. SIDE VIEW

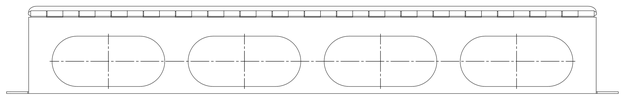

BOTTOM VIEW

PART NUMBERS	
PCMDD19003BK1	PAINTED BLACK
	TEXTURED

NOTES

Continuous hinged door with magnetic closure strip.

Mounting hardware not included

Français

Pour tous les détails sur nos produits,
svp veuillez consulter notre site www.hammondmfg.com

Data subject to change without notice. Isometric drawing not to scale.
Les données sont sujettes à changement sans préavis.

HAMMOND MANUFACTURING®

www.hammondmfg.com

PART NO. **PCMDD19003**