RE 18331-40/04.10
Replaces: RE 00199/11.07

Relief, direct acting guided poppet type

Special cavity

Cartridge style in manifold

VSC-30 **05.13.01 - X - Y - Z**

Dimensions

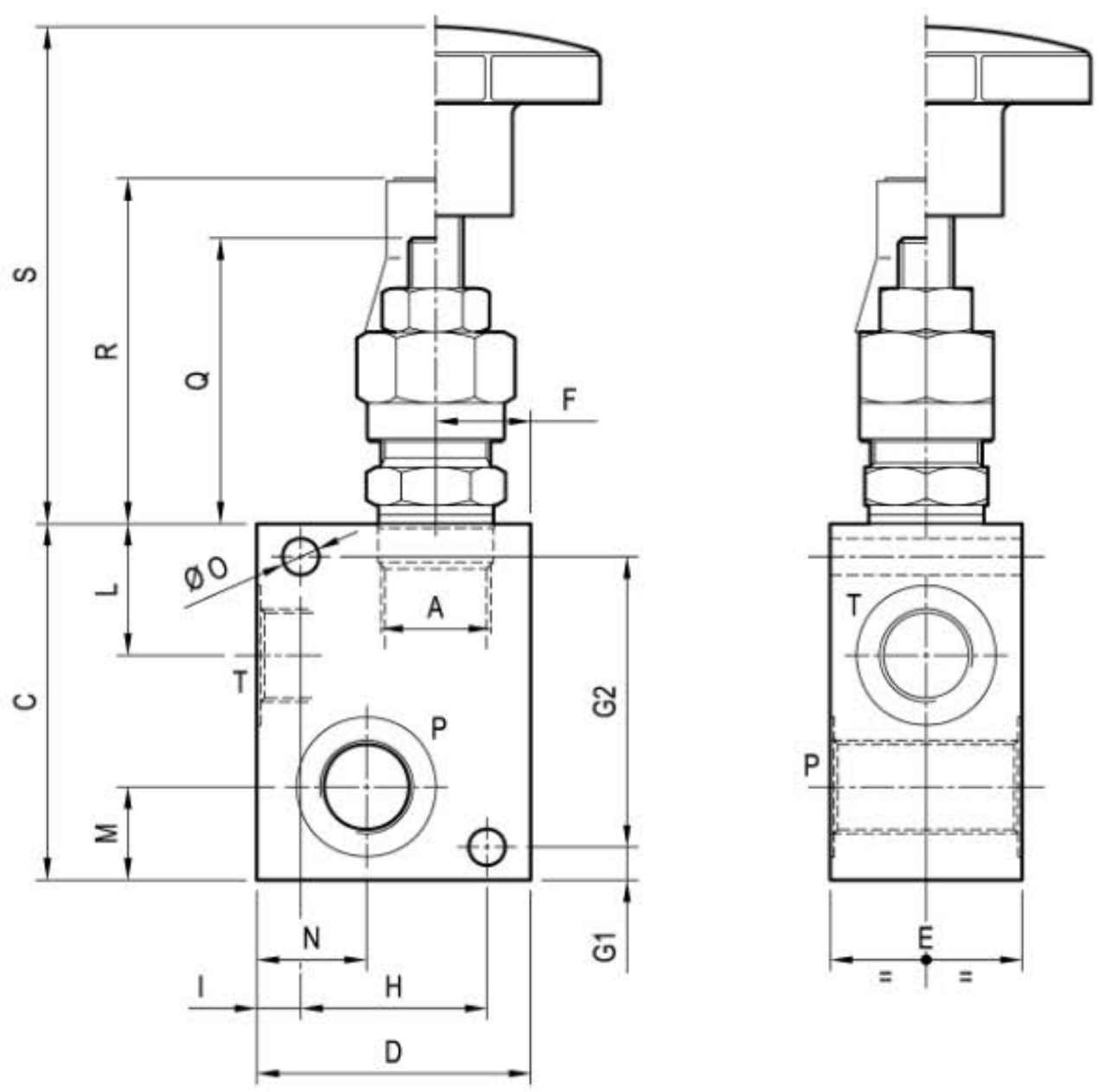

Technical data

Max flow:	up to 30 l/min	(8 gpm)
Max operating pressure:	210 bar	(3000 psi)

Standard manifolds in high strength **aluminium**.

For working pressure up to 350 bar (5000 psi) and for fatigue applications with any working pressure, steel manifolds are available upon request.

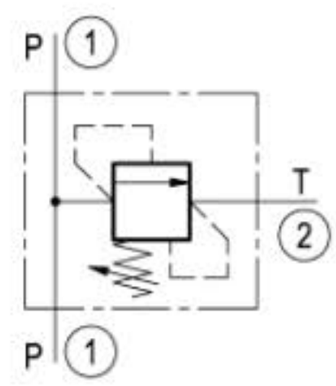

Table "Y"

Special Cavity	Y	PORT SIZE	DIMENSIONS mm (Inches)														
A		P - T	C	D	E	F	G1	G2	H	I	L	M	N	O	Q	R	S
008	**09**	G 1/4	65 (2.56)	50 (1.97)	35 (1.38)	18 (0.71)	6 (0.24)	53 (2.09)	34 (1.34)	8 (0.32)	24 (0.95)	17 (0.67)	22 (0.87)	6.5 (0.26)	51 (2.01)	61 (2.40)	89 (3.50)
	02	G 3/8	65 (2.56)	50 (1.97)	35 (1.38)	18 (0.71)	6 (0.24)	53 (2.09)	34 (1.34)	8 (0.32)	24 (0.95)	17 (0.67)	20 (0.79)	6.5 (0.26)	51 (2.01)	61 (2.40)	89 (3.50)
	03	G 1/2	65 (2.56)	50 (1.97)	35 (1.38)	18 (0.71)	6 (0.24)	53 (2.09)	34 (1.34)	8 (0.32)	24 (0.95)	17 (0.67)	18 (0.71)	6.5 (0.26)	51 (2.01)	61 (2.40)	89 (3.50)