F/UCW03

Technical terms *Technische Daten*

Rated Voltage *Nennspannung*	3V
Operating voltage *Betriebsspannungsbereich*	2...5V
a) Rated Current *Nennstrom*	≤30mA
a) Sound Output [SPL]at 10 cm *Schalldruckpegel] in 10 cm*	≥82dB
a) Resonant Frequency *Resonanzfrequenz*	2300 ±400Hz
Operating Temperature *Betriebs-Temperatur*	-20 ...+70°C
Storage Temperature *Lagerungs-Temperatur*	-20 ...+80°C
Weight *Gewicht*	2g

a) Value applying rated voltage (DC)
Wert bei angelegter Nennspannung (DC)

Drawings *Zeichnungen*

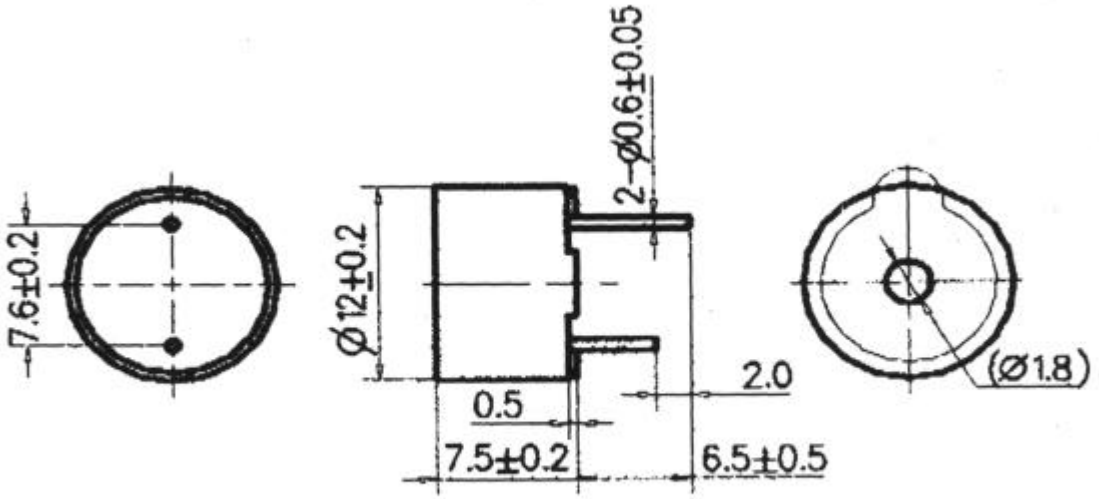

Diese Zeichnung ist unser Eigentum. Vervielfältigung, Weitergabe und Mitteilung des Inhalts an Dritte nur mit unserer Genehmigung.

DIGISOUND Electronic			Halbzeug, Werkstoff		Untolerierte Maße	Zeichn.-Nr. 981211.3B	
					Maßstab	Ersatz f. Zeichn.	Page Blatt 1 of von 2
	Tag	Name	And. zust.	And.-Mittlg. Nr.	Tag	Name	
gezeichnet							
bearbeitet	18.01.99						F/UCW03
geprüft	18.01.99						
normgepr.							

Vervielfält.-Pause Nr.

Arbeitspause Nr.

Item	Method of test	Standard
Storage in high temp.	Storage in +80°C test box for 240hours, then expose to the room temperature for 2 hours without applying power.	All specifications must be satisfied in this condition.
Storage in low temp.	Storage in –20°C test box for 240 hours, then expose to the room temperature for 2 hours without applying power.	All specifications must be satisfied in this condition.
Life test in room temp.	Operate continuously for 1000 hours with applying rated voltage.	All specifications must be satisfied in this condition.
Life test in high temp.	Operate continuously in +70°C for 500 hours applying 5V.	All specifications must be satisfied in this condition.
Life test in low temp.	Operate continuously in –20°C for 500 hours applying 2V.	All specifications must be satisfied in this condition.
Temperature cycle test	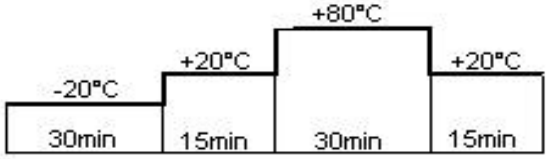 Make this test for 5 cycles without applying power, then expose to the room temperature for 2 hours.	All specifications must be satisfied in this condition.
Humidity cycle test	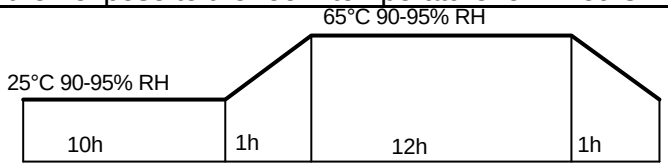 Make this test for 5 cycles without applying power, then expose to the room temperature for 2 hours.	All specifications must be satisfied in this condition.
Vibration test	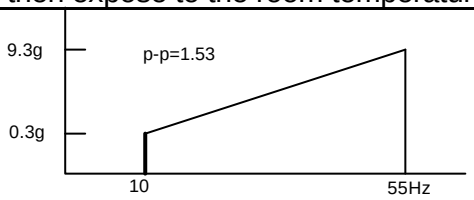 Make this test for the directions X,Y and Z for 30minutes each. To- and -fro sweep time is 1min.	All specifications must be satisfied in this condition.
Drop test	Drop a Buzzer naturally from the height of 800mm to the surface of 10 mm thick wooden board. Three directions (X,Y &Z)	All specifications must be satisfied in this condition.
Solderability	230±5°C temperature of melted solder, 3 ± 0.5sec duration of dipping. After test minimum 90% coverage of surface	All specifications must be satisfied in this condition.
Resistance against solder-heat	No deterioration after dipping in solder 260±5°C for10sec.	All specifications must be satisfied in this condition
Pin Strength	Each Pin may withstand against pulling force of 1kg for 30seconds	All specifications must be satisfied in this condition

Diese Zeichnung ist unser Eigentum. Vervielfältigung, Weitergabe und Mitteilung ihres Inhalts sowie Verwertung und Mitteilung ihres Inhalts sind ohne unsere ausdrückliche Genehmigung nicht gestattet.

DIGISOUND Electronic

Halbzeug, Werkstoff

Untolerierte Maße

Maßstab

Zeichn.-Nr. 981211.3B

Ersatz f. Zeichn.

Page Blatt 2 of von 2

Vervielfält.-Pause Nr.

Arbeitspause Nr.

	Tag	Name	And. zust.	And.-Mittlg. Nr.	Tag	Name
gezeichnet						
bearbeitet	18.01.99					
geprüft	18.01.99					
normgepr.						

F/UCW03

Reliability Test