sales@trfastenings.com
www.trfastenings.com

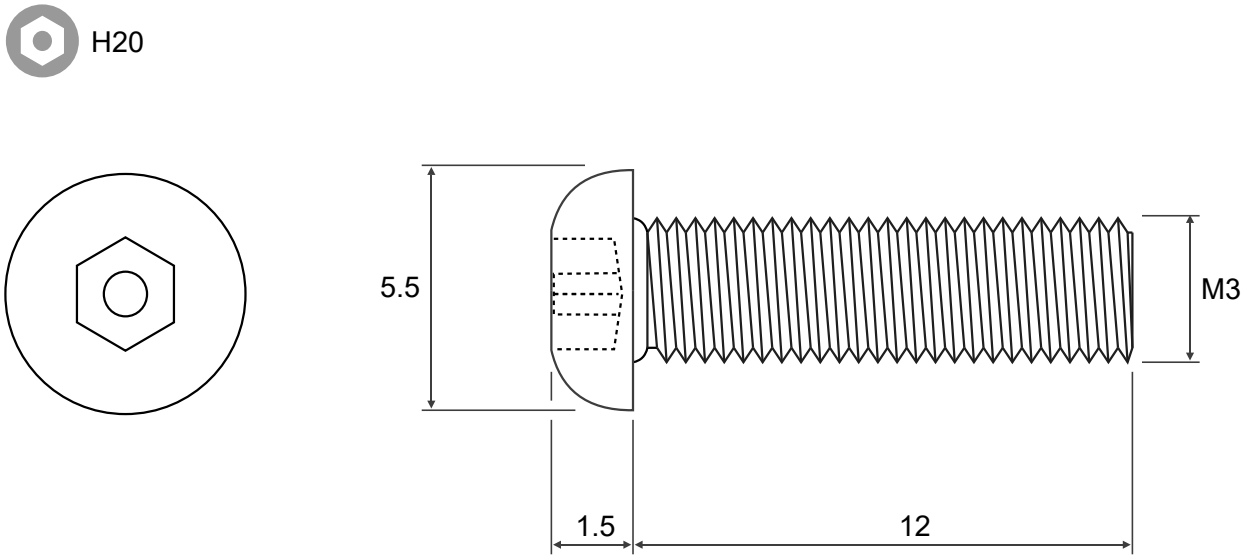

M3 x 12mm Button Head Pin Hexagon Drive Machine Screw	Material	A2 Stainless Steel	Customer Part No.	33-6642
	Finish	Self Colour	Web Ref No	TR00017438-000-000

© TR FASTENINGS LTD. 2019 THIS DRAWING IS THE PROPERTY OF TR FASTENINGS AND IS SUPPLIED IN CONFIDENCE, AND MAY NOT WHOLLY OR PARTIALLY BE COPIED, WITHOUT THE EXPRESSED AUTHORISATION OF TR FASTENINGS LTD.

UNCONTROLLED COPY FOR REFERENCE ONLY DO NOT SCALE

UNLESS OTHERWISE SPECIFIED : DIMENSIONS ARE IN MILLIMETERS