Single-way control stations XALD1••, K1••, D01

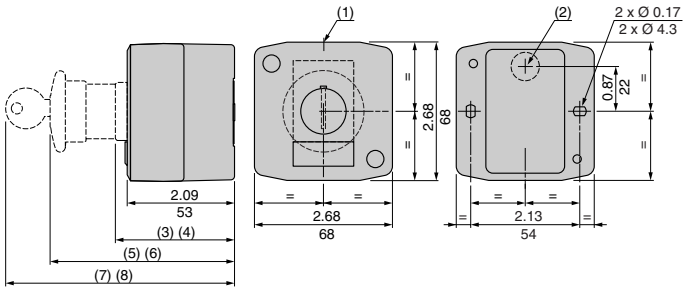

(1) 2 knock-outs for PG 13.5 cable glands, maximum capacity 0.47 in (12 mm).
(2) Knock-out for cable entry, maximum capacity 0.55 in (14 mm).

Examples:
(3) 2.44 in (62 mm) for flush push buttons.
(4) 2.59 in (66 mm) for projecting push buttons.
(5) 3.58 in (91 mm) for latching mushroom head push buttons.
(6) 2.91 in (74 mm) for key switches.
(7) 4.45 in (113 mm) for latching mushroom head push buttons with key release.
(8) 3.78 in (96 mm) for key switches with key.
(9) 2.52 in (64 mm) for pilot lights.

Two-way control stations XALD2••, K2••, D02

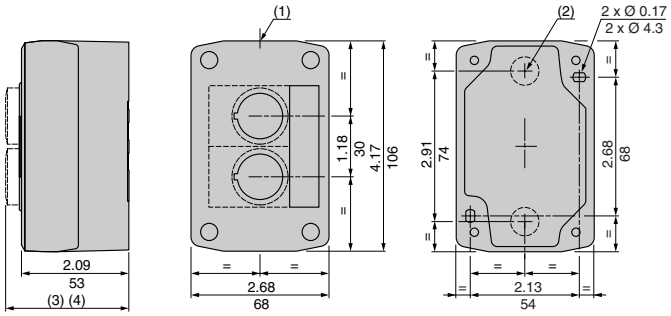

Three-way control stations XALD3••, K3••, D03

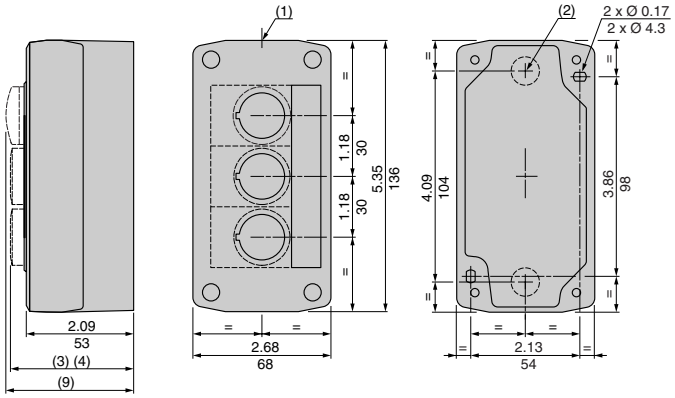

Four-way control stations XALD4••, K4••, D04

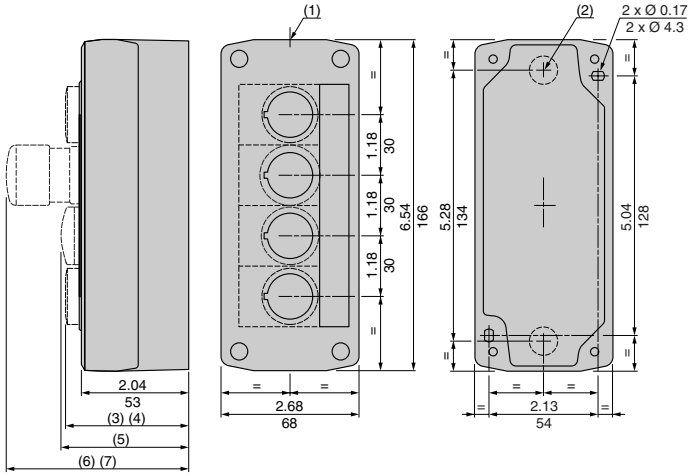

(1) 2 knock-outs for PG 13.5 cable glands, maximum capacity 0.47 in (12 mm).
(2) Knock-out for cable entry, maximum capacity 0.55 in (14 mm).

Examples:
(3) 2.44 in (62 mm) for flush push buttons.
(4) 2.59 in (66 mm) for projecting push buttons.
(5) 2.52 in (64 mm) for pilot lights.
(6) 3.43 in (87 mm) for mushroom head push buttons.
(7) 3.07 in (78 mm) for selector switches.

Five-way control stations XALD5••, K5••, D05

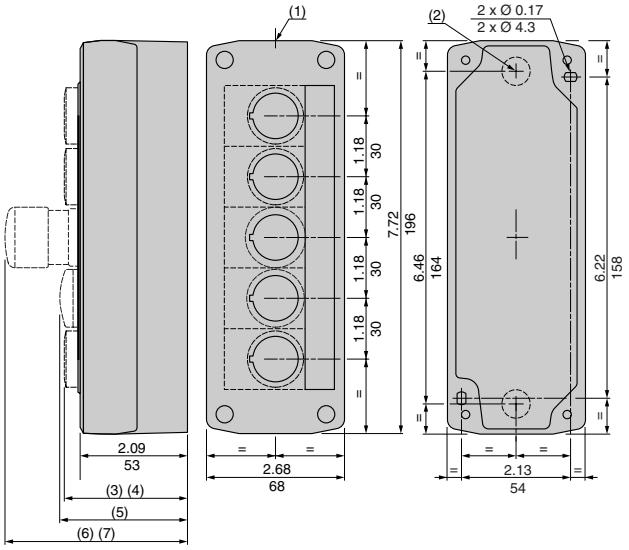

Dual Dimensions $\frac{\text{inches}}{\text{mm}}$

© 1999-2005 Schneider Electric All Rights Reserved