15 Watt Din Rail Mounted Power Supply

Features:

- 15W Single Output - Regulated
- Output Range: 12V - 24VDC
- Input: 90 - 264VAC , 47 - 63Hz
- Low Standby Power
- Fully Isolated Pri - Sec 3000Vrms
- 100% Full Burn-in Test
- LED Indicator DC On, DC Low
- Approvals: UL

Part Number	Power Rating Watts	Output Voltage (Vdc)	Output Current (mA)	Ambient Temp. (°C)	Efficiency Typical	Input Range
VTX-211-015-112	**15**	12	1200	70	>80%	90 - 264VAC
VTX-211-015-115	**15**	15	1000			
VTX-211-015-124	**15**	24	650			
Note: Other output voltages are available upon request.						

Application:

- Process Control
- Factory Automation
- Traffic & Transportation System
- Indusctrial Applications

Please contact Vigortronix for any enquiries. Products can be altered to suit custom requirements.

Vigortronix, 16 De Havilland Way, Witney, Oxfordshire, OX29 0YG, UK
Tel. +44 (0)1993 777570 Fax. +44 (0)1993 777580 Web. www.vigortronix.com E-mail: sales@vigortronix.com
Vigortronix is a trading name of Vigortronix (UK) Limited

15 Watt Din Rail Mounted Power Supply

Model: 15Watt		Specification		
Model		VTX-211-015-112	VTX-211-015-115	VTX-211-015-124
OUTPUT	Voltage DC	12V	15V	24V
	Rated Power	15W	15W	15W
	Rated Current	1.25A	1A	0.65A
	Current Range	0 - 1.25A	0 - 1.0A	0 - 0.65A
	Voltage Tolerance	1%	1%	1%
	Voltage Adj. Range	11.6V - 12.3V	14.6V - 15.3V	23.5V - 24.5V
	Minimum Load	0	0	0
	Ripple / Noise Typical	12mV	14mV	15mV
	Line Regulation	1%	1%	1%
	Load Regulation	1%	1%	1%
	Rise Time (115VAC)	100mS	100mS	100mS
	Hold Up Time (115VAC)	20mS	20mS	20mS
	Note:	The ripple values are measured at 20MHz of bandwidth by using a 12'' twisted pair-wire terminated with 0.1uF & 47uF parallel capacitor under ambient temperature 25°C at rated input voltage and rated load		
INPUT	Voltage Range	90 - 264VAC /	90 - 264VAC	90 - 264VAC
	Input Frequency	47 - 63Hz	47 - 63Hz	47 - 63Hz
	Efficiency	>80%	>80%	>83%
	Current	0.28A (115VAC) / 0.15A (230VAC)		
	Inrush Current	30A (115VAC) / 60A (230VAC)		
	Leakage Current	<0.25mA		
	No Load Power	1.7W		
Protection	Over Current	1.8A	1.8A	0.9A
	Over Voltage	18V	18V	30V
	Short Circuit Protection	Hiccup mode, it will recover automatically after fault condition is removed		
	Over Temperature	Over temperature protection value: 100±10°C		
	Surge Voltage (L - N)	2KV		
Dielectric Isolation	Isolation Voltage	I/P-O/P: 3KVac, I/P-FG: 1.5KVac, O/P-FG: 1.5KVac		
Enviroment	Operating Temperature	-25°C - +70°C (With Derating)		
	Operating Relative Humidity	Non Condensing 20 - 95%		
	Storage Temperature	-40°C - +85°C (Humidity 5 ~ 95% RH)		
	MTBF	>200,000Hrs @ 25°C (MIL-HDBK-217F)		
	Weight	200g		
	Cooling Method	Free Air Convection		
	Mounting	Vertical		
Safety	Compliant Standards	UL/IEC/EN60950-1		
EMC	EMI / EMS	EN 55022:2010+AC:2011 (CISPR 22:2008) ClassB EN 61000-3-2:2014 (IEC 61000-3-2:2014) EN 61000-3-3:2013 (IEC 61000-3-3:2013) EN 55024:2010 (CISPR 24:2010)		

Please contact Vigortronix for any enquiries. Products can be altered to suit custom requirements.

Vigortronix, 16 De Havilland Way, Witney, Oxfordshire, OX29 0YG, UK
Tel. +44 (0)1993 777570 Fax. +44 (0)1993 777580 Web. www.vigortronix.com E-mail: sales@vigortronix.com
Vigortronix is a trading name of Vigortronix (UK) Limited

Electrical Derating Graphs

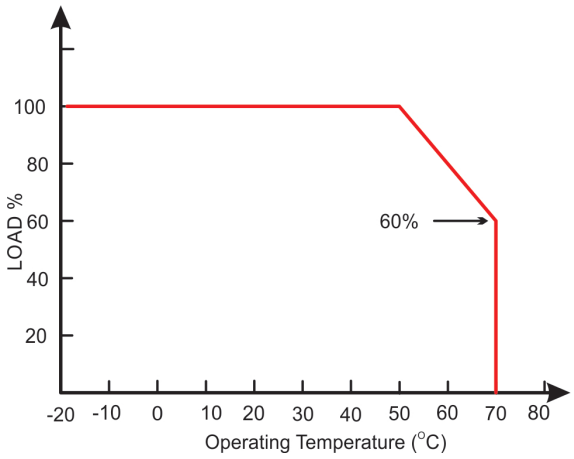

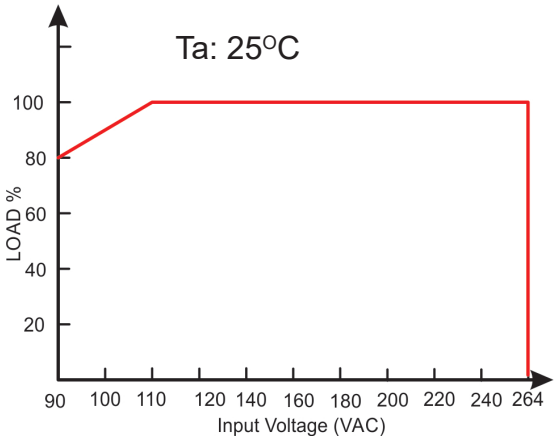

Block Diagram

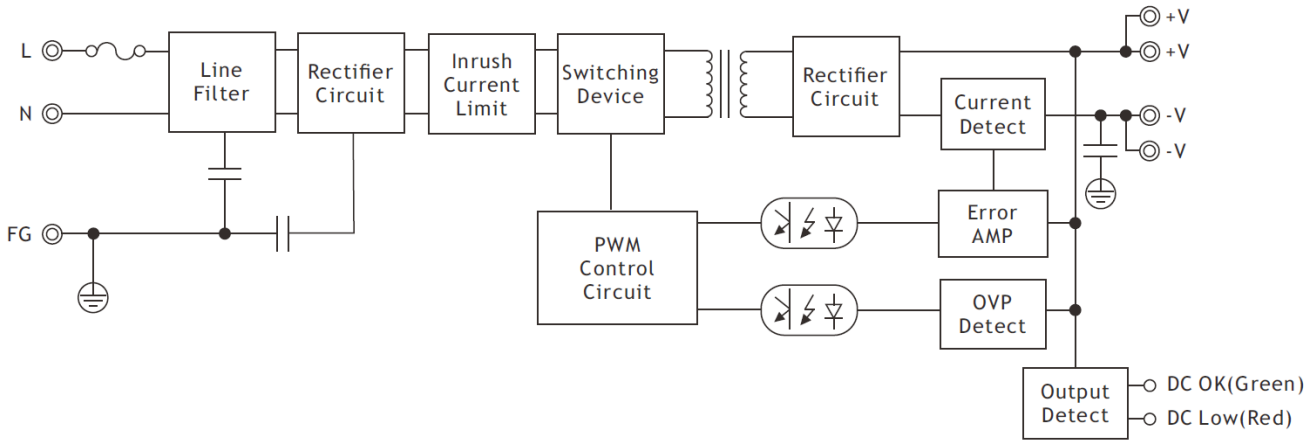

LED(Green)
DC OK LED light will be ON when the power supply is properly operated

LED(Red)
DC Low LED light will be ON:
(1) when output voltage is below 85%(±2.5%) from the rated output voltage;
(2) when get over voltage, over current, over temperature and short circuit fault

Please contact Vigortronix for any enquiries. Products can be altered to suit custom requirements.

Vigortronix, 16 De Havilland Way, Witney, Oxfordshire, OX29 0YG, UK
Tel. +44 (0)1993 777570 Fax. +44 (0)1993 777580 Web. www.vigortronix.com E-mail: sales@vigortronix.com
Vigortronix is a trading name of Vigortronix (UK) Limited

Mechanical Layout

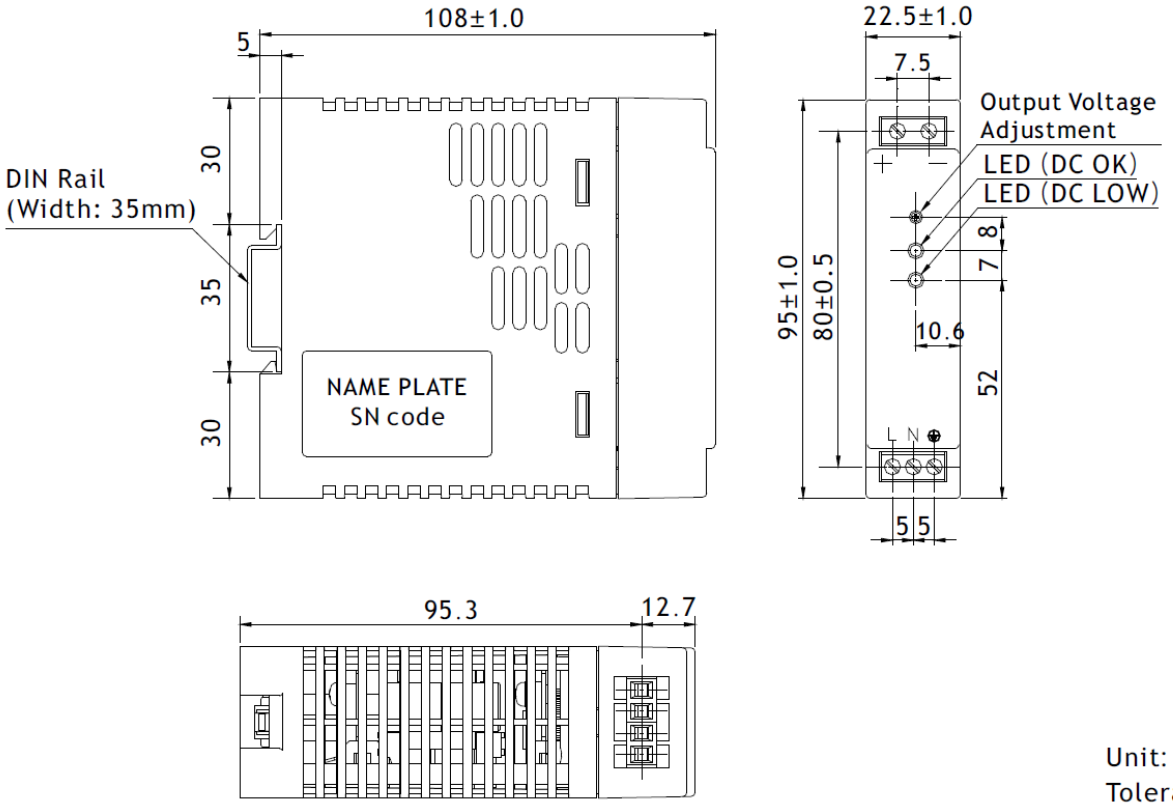

Unit: mm
Tolerance: ±1.0

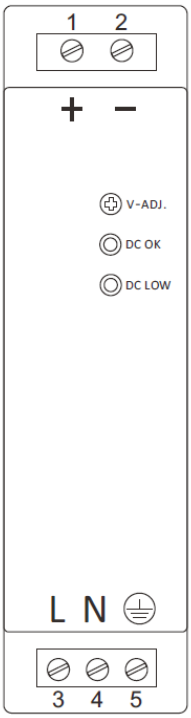

Marking	No.	Assignment
+	1	DC(+) Output Terminal
−	2	DC(-) Output Terminal
L	3	AC(L) Input Terminal
N	4	AC(N) Input Terminal
⏚	5	AC Grounding Terminal
V-ADJ.	/	DC Output voltage adjustment trimmer
DC OK	/	DC Output OK indication LED(Green)
DC LOW	/	DC Output Low indication LED(Red)

Please contact Vigortronix for any enquiries. Products can be altered to suit custom requirements.

Vigortronix, 16 De Havilland Way, Witney, Oxfordshire, OX29 0YG, UK
Tel. +44 (0)1993 777570 Fax. +44 (0)1993 777580 Web. www.vigortronix.com E-mail: sales@vigortronix.com
Vigortronix is a trading name of Vigortronix (UK) Limited

Application Note: Series Connection

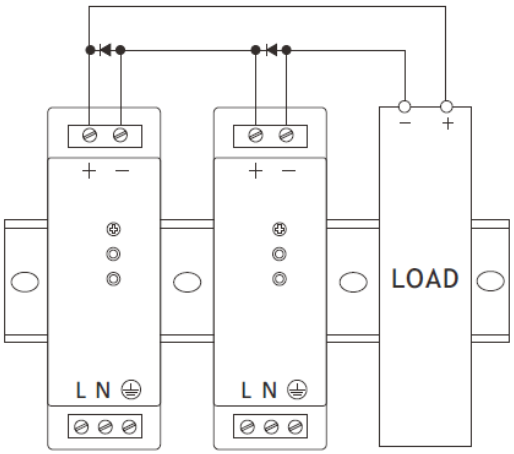

Series Operation A

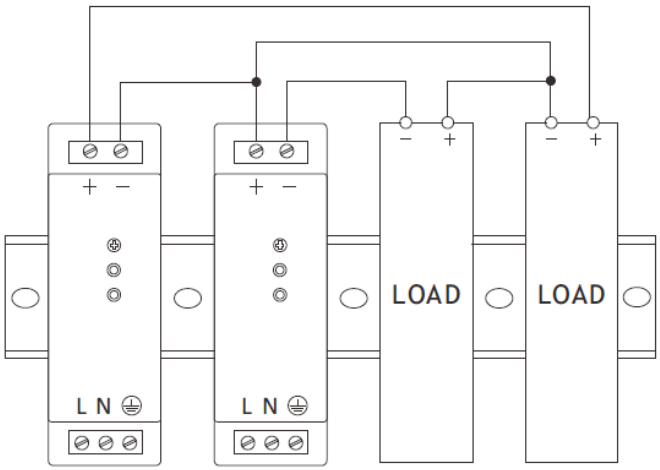

Series Operation B

Note:
1. Series operation can be connected as shown in above;
2. Load current should be less than the current value of the product with the lowest output current specified at the product specification with the power supply at series connection.

Application Note: Parallel Connection

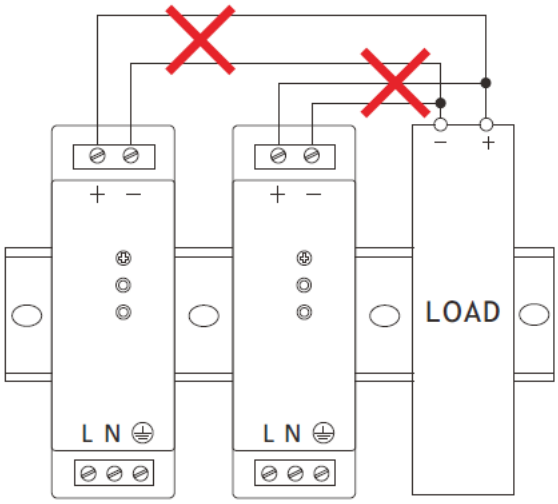

Parallel Operation A
(Unable to use)

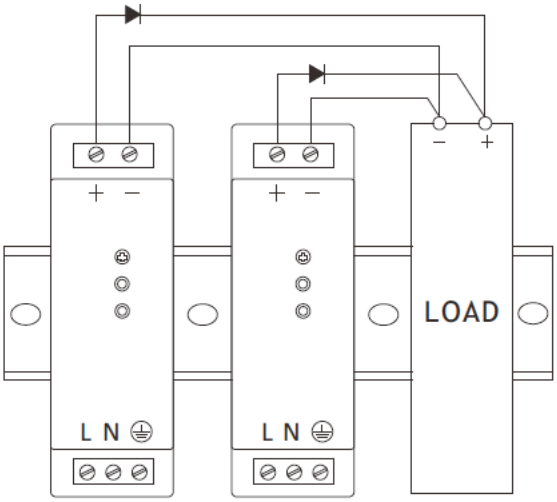

Parallel Operation B
(Backup)

Note:
1. Parallel operation should be composed with the same products, while the connection should be as shown as “Parallel operation B”;
2. In parallel operation B, current capacity cannot be increased, while it should be used for backup only. Moreover, diode that is to be added during parallel operation should be selected after considering it’s voltage drop, output voltage and current capacity

Please contact Vigortronix for any enquiries. Products can be altered to suit custom requirements.

Vigortronix, 16 De Havilland Way, Witney, Oxfordshire, OX29 0YG, UK
Tel. +44 (0)1993 777570 Fax. +44 (0)1993 777580 Web. www.vigortronix.com E-mail: sales@vigortronix.com
Vigortronix is a trading name of Vigortronix (UK) Limited

15 Watt Din Rail Mounted Power Supply

Application Note: Mounting

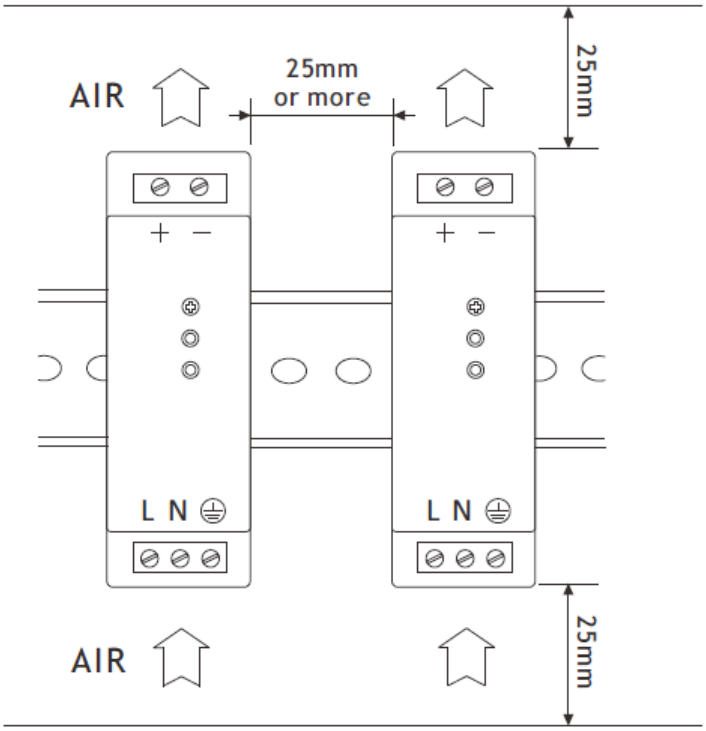

Mounting method should be considered with airflow. Leave enough space between the units
when several units are mounted together. Forced air cooling makes protection against heat better.

Application Note: Fitting

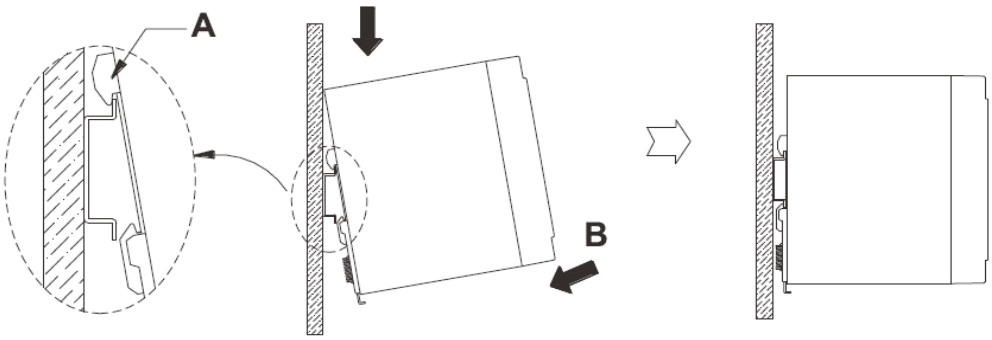

Firstly hang A part on the top of Rail as shown in below, then push the power supply into B direction
to fix it.

Application Note: Removing

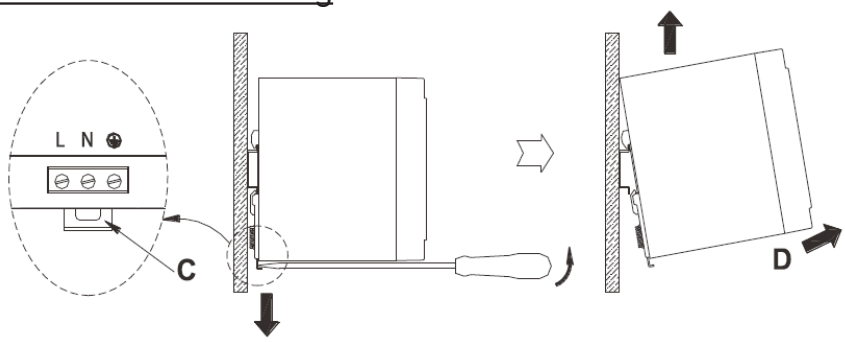

Remove the power supply to D direction, pulling C part by using tools, such as a screwdriver, to downward direction.

Please contact Vigortronix for any enquiries. Products can be altered to suit custom requirements.

Vigortronix, 16 De Havilland Way, Witney, Oxfordshire, OX29 0YG, UK
Tel. +44 (0)1993 777570 Fax. +44 (0)1993 777580 Web. www.vigortronix.com E-mail: sales@vigortronix.com
Vigortronix is a trading name of Vigortronix (UK) Limited