Extract from the online catalog

SAC-3P- 5,0-PUR/M 8FR-2L

Order No.: 1671085

http://eshop.phoenixcontact.net/phoenix/treeViewClick.do?UID=1671085

Sensor-/Aktor-Kabel, 3-polig, PUR halogenfrei, schwarzgrau RAL 7021, freies Leitungsende, auf Buchse gewinkelt M8, mit 2 LEDs, Kabellänge: 5 m

Commercial data	
EAN	4 017918 134938
Pack	1 pcs.
Customs tariff	85444290
Catalog page information	Page 120 (PC-2011)

Product notes

WEEE/RoHS-compliant since: 09/06/2006

http://www.download.phoenixcontact.com Please note that the data given here has been taken from the online catalog. For comprehensive information and data, please refer to the user documentation. The General Terms and Conditions of Use apply to Internet downloads.

Technical data

General data

Rated current at 40°C	4 A
Rated voltage	24 V
Number of positions	3
Volume resistance	≤ 5 mΩ

Insulation resistance	≥ 100 MΩ
Length of cable	5 m
Stripping length of the free conductor end	50 mm
Ambient temperature (operation)	-25 °C ... 90 °C (Male connector / female connector)

General characteristics

Standards/regulations	M8 connector IEC 61076-2-104
Coding	A - standard
Surge voltage category	II
Pollution degree	3
Degree of protection	IP65/67
Torque	0.2 Nm (M8 plug-in connectors)
Contact material	CuSn
Contact surface material	Ni/Au
Contact carrier material	TPU GF
Material of grip body	TPU, hardly inflammable, self-extinguishing
Material, knurls	Zinc die-cast, nickel-plated
Sealing material	NBR
Status display	2 LEDs

Conductor data

Cable type	PUR halogen-free black
Cable type (abbreviation)	PUR
Cable abbreviation	Li9Y11Y-HF
UL AWM Style	20549
Conductor cross section	3x 0.25 mm² (signal line)
AWG signal line	24
Conductor structure signal line	32x 0.10 mm
Core diameter including insulation	1.17 mm ±0.02 mm (signal line)
Thickness, insulation	≥ 0.38 mm (Core insulation)
	Approx. 0.9 mm (Outer cable sheath)
External cable diameter	4.4 mm ±0.15 mm
Wire colors	brown, blue, black
External sheath, color	Black-gray RAL 7021
Insulation resistance	≥ 100 GΩ*km (at 20 °C)
Conductor resistance	≤ 78 Ω/km (at 20 °C)

Nominal voltage, conductor	≤ 300 V
Test voltage, conductor	≥ 3000 V
Overall twist	3 wires, twisted
Length of twist, overall twist	40 mm
Outer sheath, material	PUR
Material conductor insulation	PP
Conductor material	Bare Cu litz wires
Cable weight	24 kg/km
Smallest bending radius, fixed installation	22 mm
Smallest bending radius, movable installation	44 mm
Number of bending cycles	4000000
Bending radius	44 mm
Traversing path	10 m
Traversing rate	3 m/s
Acceleration	10 m/s²
Ambient temperature (operation)	-40 °C ... 80 °C (cable, fixed installation)
	-25 °C ... 80 °C (cable, flexible installation)
Special properties	Flexible cable conduit capable
	Silicone-free
	Free of substances which would hinder coating with paint or varnish
Flame resistance	in accordance with DIN UL-Style 20549
Halogen-free	in accordance with DIN VDE 0472 part 815
Resistance to oil	in accordance with DIN EN 60811-2-1
Other resistance	hydrolysis and microbe resistant
	Highly resistant to acids, alkaline solutions and solvents
	Resistant to salt water
	partly UV-resistant in accordance with DIN EN ISO 4892-2-A

Certificates / Approvals

Certification	CUL Listed, GOST, UL Listed

Accessories

Item	Designation	Description
Marking		
1051993	B-STIFT	Marker pen, for manual labeling of unprinted Zack strips, smear-proof and waterproof, line thickness 0.5 mm
1013944	PABA RD/15	Insert label, red, Unlabeled, Can be labeled with: Plotter, Mounting type: Thread on, Cable diameter: 0.6-50 mm, Lettering field: 15 x 4 mm
1013151	PABA WH/15	Insert label, white, Unlabeled, Can be labeled with: Plotter, Mounting type: Thread on, Cable diameter: 0.6-50 mm, Lettering field: 15 x 4 mm
1013698	PABA YE/15	Insert label, yellow, Unlabeled, Can be labeled with: Plotter, Mounting type: Thread on, Cable diameter: 0.6-50 mm, Lettering field: 15 x 4 mm
1013850	PATG 2/23	Conductor marker carrier, transparent, Unlabeled, Mounting type: Slide on, Cable diameter: 2-4 mm, Lettering field: 4 x 23 mm
1013863	PATG 3/23	Conductor marker carrier, transparent, Unlabeled, Mounting type: Slide on, Cable diameter: 4-7 mm, Lettering field: 4 x 23 mm
0808011	PATG 4/23	Conductor marker carrier, transparent, Unlabeled, Mounting type: Slide on, Cable diameter: 6-10 mm, Lettering field: 4 x 23 mm
Protection and sealing elements		
1430860	PROT-M 8 MS-PA-CHAIN	M8 sealing cap made of plastic with fixing band for sensor cables, for M8 sockets
Tools		
1212207	CUTFOX-S VDE	Diagonal cutter for copper and aluminum conductors, VDE-tested
1208461	SAC BIT M8-D10	Nut for assembling sensor/actuator cables with M8 connector and for M8 connectors with QUICKON fast connection technology, for 4 mm hexagonal drive
1208487	TSD 02 SAC	Torque screwdriver, with preset torque of 0.2 Nm and 4 mm hexagonal drive for M8 connectors
1212150	WIREFOX 10	Stripping tool, for cables and conductors from 0.02 - 10 mm², self-adjusting, stripping length of up to 18 mm, cutting capacity of up to 10 mm² stranded/1.5 mm² solid, replaceable stripping blade
1212623	WIREFOX SAC	Stripping pliers, for halogen-free sensor/actuator cables (SAC cables), with PUR and PVC insulation, from Ø of 4.4 to 7 mm, any stripping length

Diagrams/Drawings

Dimensioned drawing

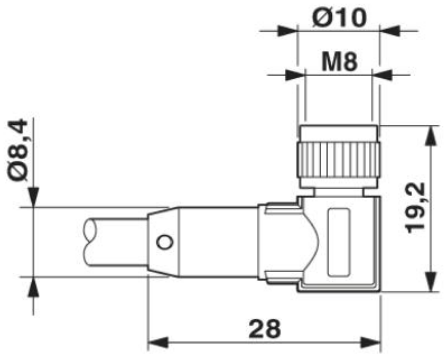

Socket M8 x 1, angled, with LED

Circuit diagram

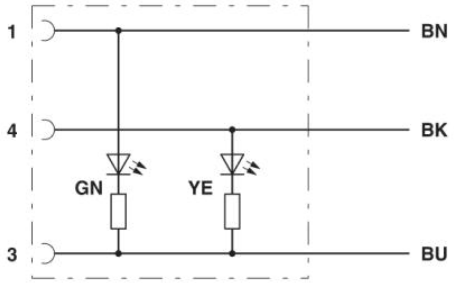

Contact assignment of M8 socket with 2 LEDs

Schematic diagram

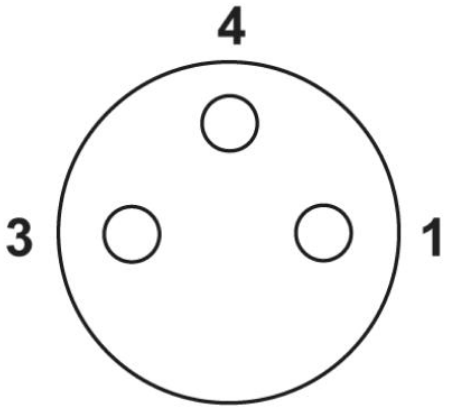

Pin assignment M8 socket, 3-pos., view female side

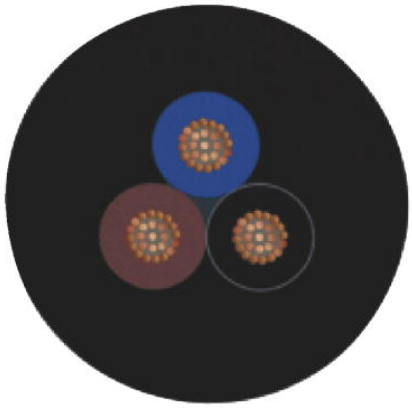

PUR halogen-free black [PUR]

Connection data incl. use groups

Address

PHOENIX CONTACT GmbH & Co. KG
Flachsmarktstr. 8
32825 Blomberg,Germany
Phone +49 5235 3 00
Fax +49 5235 3 41200
http://www.phoenixcontact.com

© 2012 Phoenix Contact
Technical modifications reserved;