THIS IS A C.A.D. GENERATED DRAWING
DO NOT MAKE MANUAL REVISIONS TO MASTER.

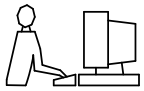

* UNLESS OTHERWISE SPECIFIED TOLERANCES ON DECIMAL IS:

UNIT: MM	UNIT: INCH
X.X ± 0.25	X.X ± 0.010
X.XX ± 0.13	X.XX ± 0.005
X.XXX ± 0.05	X.XXX ± 0.002
X.° ± 1°	X.° ± 1°
X.X° ± 0.5°	X.X° ± 0.5°

ISSUE NUMBER	
ORIGINAL	1

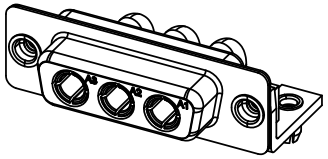

SCALE 1:1

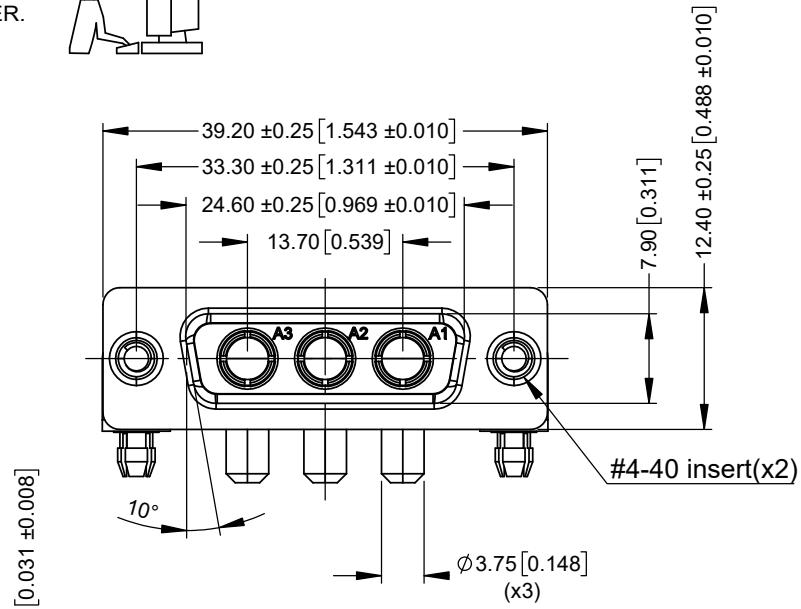

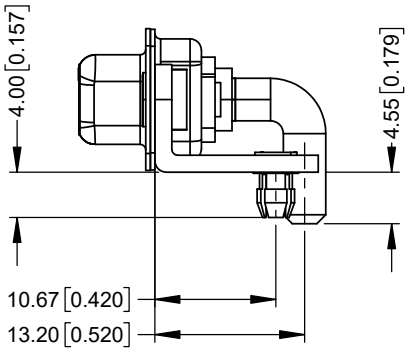

SPECIFICATIONS:

ELECTRICAL:
- INSULATOR RESISTANCE: 5 GΩ
- DIELEC. WITHSTAND VOLTAGE: 1,000 VAC FOR 1 MIN
- POWER CONTACT CURRENT: 40A PER CONTACT MAX
- POWER CONTACT RESISTANCE: 2 mΩ MAX.
- WORKING VOLTAGE: 250V

MATERIAL:
- INSULATOR: PBT UL94 V-0, BLACK
- SHELL: STEEL, Ni PLATED
- CONTACTS: COPPER ALLOY, FULL GOLD FLASH

GENERAL:
- OPERATING TEMPERATURE: -55°C ~ 125°C
- PROCESS TEMP.: 230°C

RECOMMENDED PCB LAYOUT
RECOMMENDED PCB THICKNESS 1.6 MAX

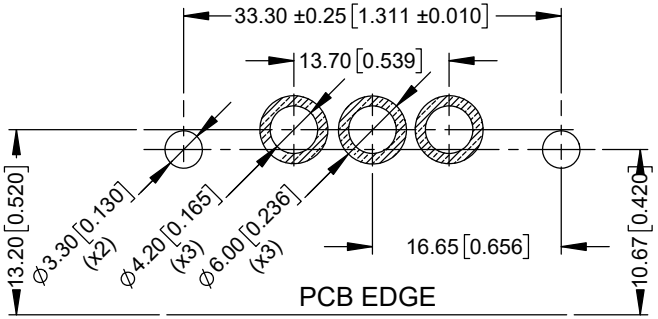

THESE DRAWINGS AND SPECIFICATIONS ARE THE PROPERTY OF MH CONNECTORS AND SHALL NOT BE REPRODUCED, COPIED OR USED AS THE BASIS FOR THE MANUFACTURE OR SALE OF APPARATUS WITHOUT WRITTEN PERMISSION.

DRAWN	DATE
E.P	02-05-23
APPROVED	DATE
S.R	02-05-23

RoHS COMPLIANT

THIS SERIES FULLY CONFORMS TO THE EUROPEAN UNION DIRECTIVES 2015/863/EU AND 2011/65/EU FOR RoHS COMPLIANCY.

MH CONNECTORS

MH CONNECTORS , DIVISION OF EDAC

SCALE	SHEET	OF	REV:
NA	1	1	1

DRAWING No MHCDR3W3S4