REV.	DATE	DESCRIPTION
A	08/25/04	MODIFY COUPLING NUT PLATING

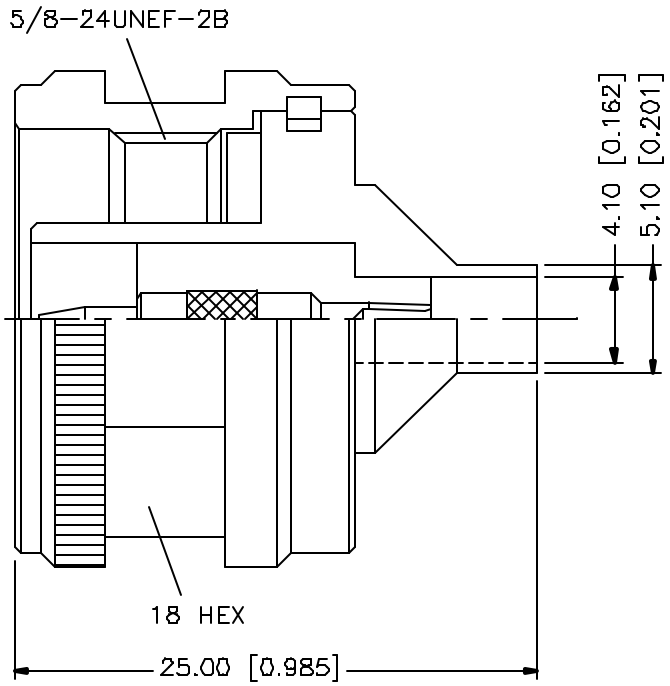

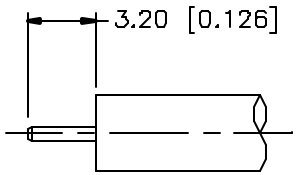

RECOMMENDED CABLE
STRIPPING DIMENSIONS

	DESCRIPTION	MATERIAL	FINISH	QTY
8				
7				
6				
5	COUPLING NUT	BRASS	NEXCOTE	1
4	GASKET	SILICONE	RED	1
3	CONTACT PIN	PHOS. BRONZE	GOLD	1
2	INSULATOR	TEFLON	NATURAL	1
1	BODY	BRASS	GOLD	1

UNLESS OTHERWISE SPECIFIED DIMENSIONS ARE IN MILLIMETERS. DIMENSIONS IN [ ] ARE IN INCHES AND FOR CUSTOMER REFERANCE ONLY.

UNLESS OTHERWISE SPECIFIED TOLERANCES FOR MILLIMETERS ARE:
0.5 – 6mm ± 0.20mm
6 – 30mm ± 0.40mm
30 – 120mm ± 0.50mm

UNLESS OTHERWISE SPECIFIED TOLERANCES FOR INCHES ARE:
.020 – .315 = ± 0.007"
.315 – 1.180 = ± 0.015"
1.180 – 4.724 = ± 0.020"

DO NOT SCALE DRAWING

APPROVALS		DATE
DRAWN	G.R.S.	08/25/04
CHECKED		
ISSUED		
SHEET	1 OF 1	

CAD FILE C:/172/172133-11.DWG

Amphenol Connex

PART DESCRIPTION
N DIRECT SOLDER PLUG
(FOR .141" SEMI RIGID CABLE)

PART NO. 172133-11

DWG. NO.	REV.	SIZE	SCALE
172133-11.DWG	A	A	NA