230V 750W

IMPACT DRILL

GB

56369 - ID750MGD SPARE PARTS DRAWING

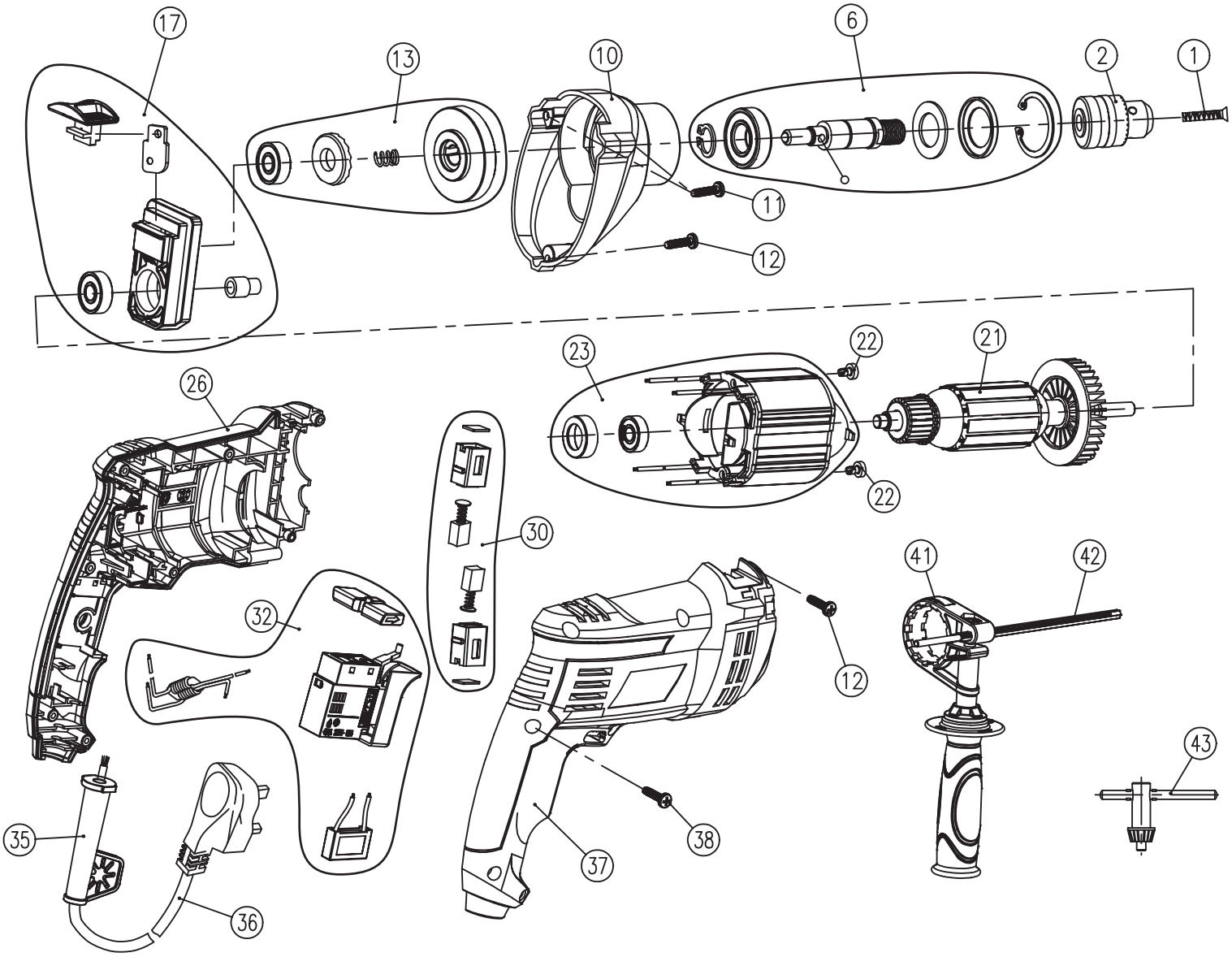

Helpline: +44 (0) 23 8049 4344 Sales Desk: +44 (0) 23 8049 4333 General Enquiries: +44 (0) 23 8026 6355 internet: drapertools.com email: sales@drapertools.com

Draper Tools Limited, Hursley Road, Chandler's Ford, Eastleigh, Hampshire. SO53 1YF UK.

230V 750W

IMPACT DRILL

GB

56369 - ID750MGD SPARE PARTS LISTING

KEY No.	PART No.	STOCK No.	DESCRIPTION
1	YID750MGD-1	97530	Left-threaded screw M6*25
2			Chuck
6	YID750MGD-6	97499	Output spindle assembly
10	YID750MGD-10	97503	Gear housing
11	YID750MGD-11	97504	Tapping screw ST4*20
12	YID750MGD-12	97505	Tapping screw ST4*16
13	YID750MGD-13	97506	Drive gear assembly
17	YID750MGD-17	97510	Central support assembly
21	YID750MGD-21	97514	Rotor
22	YID750MGD-22	97515	Stator locator pin
23	YID750MGD-23	97516	Stator assembly
26	YID750MGD-26	97519	Housing
30	YID750MGD-30	97522	Carbon brush assembly (pair)
32	YID750MGD-32	97524	Switch assembly
35	YID750MGD-35	97527	Cable protector
36	YID750MGD-36	97528	Cable 2*0.75mm²
37	YID750MGD-37	97529	Upper housing
41	YID750MGD-41	97531	Auxiliary handle assembly
42	YID750MGD-42	97532	Depth stop
43	YID750MGD-43	97495	Chuck key

KEY No.	PART No.	STOCK No.	DESCRIPTION

Helpline: +44 (0) 23 8049 4344 Sales Desk: +44 (0) 23 8049 4333 General Enquiries: +44 (0) 23 8026 6355 internet: drapertools.com email: sales@drapertools.com

Draper Tools Limited, Hursley Road, Chandler's Ford, Eastleigh, Hampshire. SO53 1YF UK.