GB

230V VARIABLE SPEED MINI

WOOD LATHE

60988 - WTL330A SPARE PARTS DRAWING

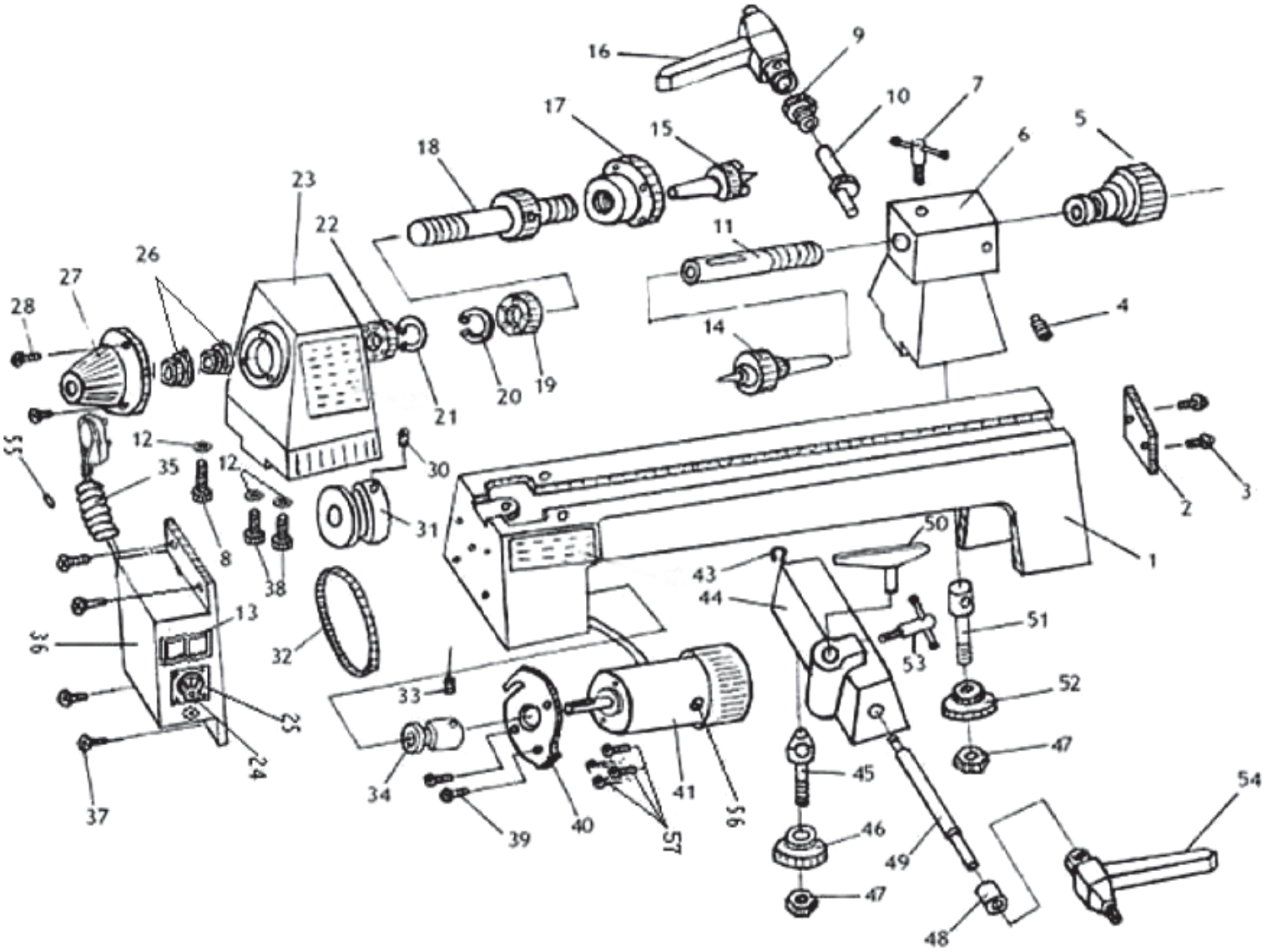

Helpline: +44 (0) 23 8049 4344 Sales Desk: +44 (0) 23 8049 4333 General Enquiries: +44 (0) 23 8026 6355 internet: drapertools.com email: sales@drapertools.com

Draper Tools Limited, Hursley Road, Chandler's Ford, Eastleigh, Hampshire. SO53 1YF UK.

DRAPER®

GB

230V VARIABLE SPEED MINI

WOOD LATHE

60988 - WTL330A SPARE PARTS DRAWING

KEY No.	PART No.	STOCK No.	DESCRIPTION
1	YWTL330A-01	62648	Bed
2	YWTL330A-02	62649	Retaining plate
3	YWTL330A-03	62650	Screw M5x8
4	YWTL330A-04	62651	Screw M6x8
5	YWTL330A-05	62652	Handwheel
6	YWTL330A-06	62655	Tailstock
7	YWTL330A-07	62657	T-lock knob bolt
8	YWTL330A-08	62665	Cap screw M8x40
9	YWTL330A-09	62677	Sleeve
10	YWTL330A-10	62718	Eccentric axis
11	YWTL330A-11	62721	Tailstock spindle
12	YWTL330A-12	62723	Lock washer 8MM
13	YWTL330A-13	62726	Paddle switch
14	YWTL330A-14	62738	Live centre assembly
15	YWTL330A-15	62746	Spur center
16	YWTL330A-16	62747	Tailstock lock handle
17	YWTL330A-17	62752	Face plate-6"
18	YWTL330A-18	62753	Headstock spindle
19	YWTL330A-19	62761	Ball bearing 6004ZZ
20	YWTL330A-20	62768	Retaining ring C40
21	YWTL330A-21	62770	Retaining ring C40
22	YWTL330A-22	62772	Ball bearing 6004ZZ
23	YWTL330A-23	62775	Headstock
24	YWTL330A-24	62778	Speed dial switch
25	YWTL330A-25	62779	Speed dial lable
26	YWTL330A-26	62788	Headstock spindle nut
27	YWTL330A-27	62789	Outboard spindle cover
28	YWTL330A-28	62790	Screw M4x10
30	YWTL330A-30	62791	Set screw M6x8
31	YWTL330A-31	62793	Drive pully
32	YWTL330A-32	62794	Belt K-516
33	YWTL330A-33	62795	Set screw M6x10
34	YWTL330A-34	62796	Motor pulley
35	YWTL330A-35	62798	Power cord
36	YWTL330A-36	62800	Variabel speed box
37	YWTL330A-37	62803	Screw M4x10
* 38	YWTL330A-38	62814	Cap screw M8x25
39	YWTL330A-39	62825	Cap screw M6x16
40	YWTL330A-40	62828	Motor plate
41	YWTL330A-41	62838	Motor

KEY No.	PART No.	STOCK No.	DESCRIPTION
43	YWTL330A-43	62852	Retaining ring 8MM
44	YWTL330A-44	62863	Tool rest base
45	YWTL330A-45	62864	Special bolt
46	YWTL330A-46	62865	Plate
47	YWTL330A-47	62868	Lock nut M8
48	YWTL330A-48	62869	Sleeve
49	YWTL330A-49	62870	Eccentric rod
50A	YWTL330A-50A	62871	Large tool rest
50B	YWTL330A-50B	62872	Small tool rest
51	YWTL330A-51	62873	Special bolt
52	YWTL330A-52	62874	Plate
53	YWTL330A-53	62875	T-lock knob bolt
54	YWTL330A-54	62876	Tool holder lock handle
55	YWTL330A-55	62878	Fuse
56	YWTL330A-56	62879	Carbon brush
57	YWTL330A-57	62886	Cap screw M5X8
s	YWTL330A-58	62891	Flat wrench
v	YWTL330A-59	62895	Push-out rod