230V DIRECT DRIVE

OIL COMPRESSOR

GB

24981 – DA50/207 SPARE PARTS DRAWING

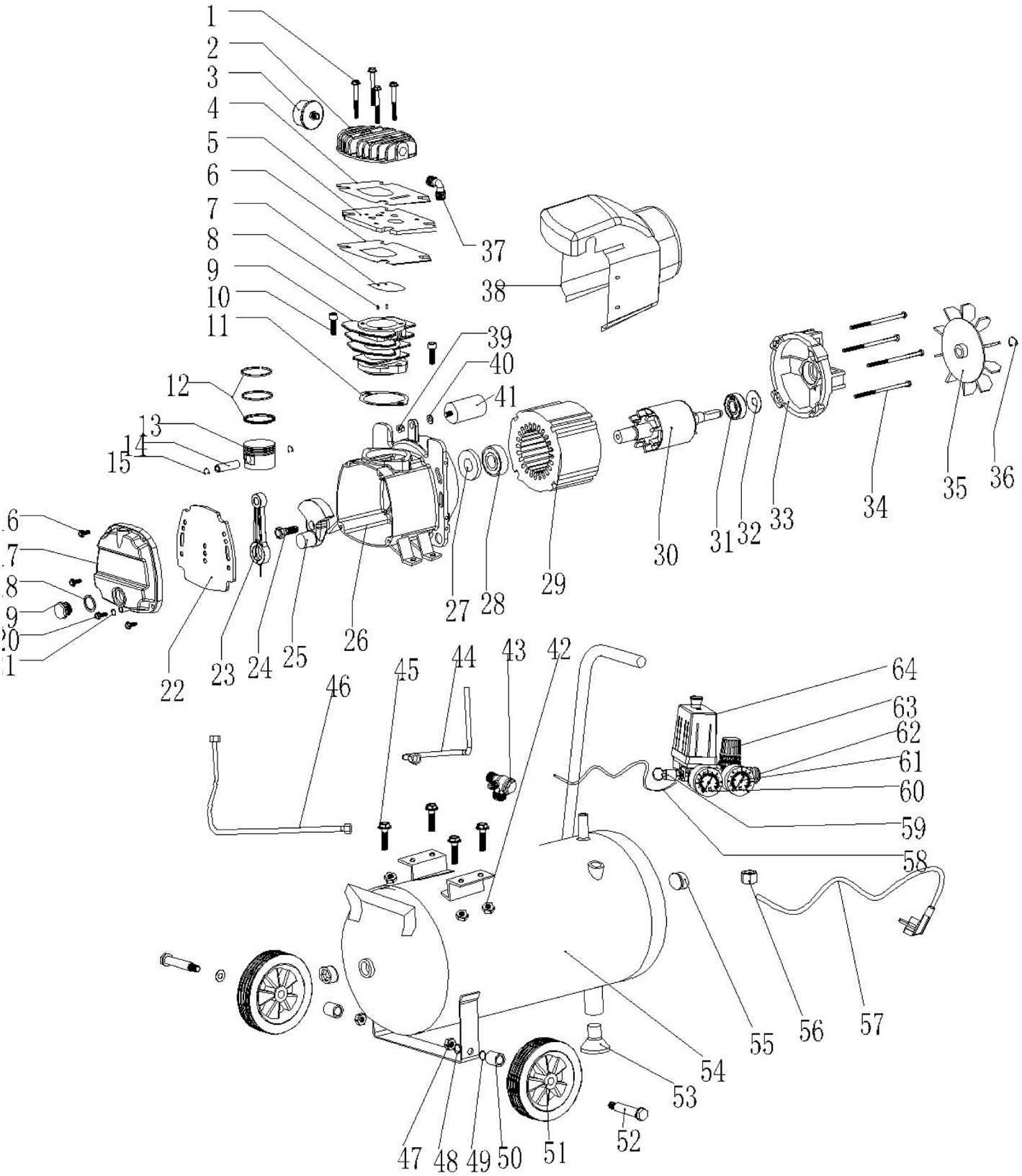

Helpline: +44 (0) 23 8049 4344 Sales Desk: +44 (0) 23 8049 4333 General Enquiries: +44 (0) 23 8026 6355 internet: drapertools.com email: sales@drapertools.com

Draper Tools Limited, Hursley Road, Chandler's Ford, Eastleigh, Hampshire. SO53 1YF UK.

DRAPER®

230V DIRECT DRIVE

OIL COMPRESSOR

GB

24981 – DA50/207 SPARE PARTS LISTING

KEY No.	PART No.	STOCK No.	DESCRIPTION
01	CDA50/207-01	25669	Bolt
02	CDA50/207-02	25670	Cylinder head
03	CDA50/207-03	25671	Air filter
04	CDA50/207-04	25672	Cylinder head gasket
05	CDA50/207-05	25673	Valve plate
06	CDA50/207-06	25674	Valve plate gasket
07	CDA50/207-07	25675	Valve
08	CDA50/207-08	25676	Pin
09	CDA50/207-09	25677	Cylinder
10	CDA50/207-10	25678	Bolt
11	CDA50/207-11	25679	Cylinder gasket
12	CDA50/207-12	25680	Piston ring
13	CDA50/207-13	25690	Piston
14	CDA50/207-14	25691	Piston pin
15	CDA50/207-15	25692	Circlip
16	CDA50/207-16	25693	Bolt
17	CDA50/207-17	25694	Crankcase cover
18	CDA50/207-18	25695	Vial gasket
19	CDA50/207-19	25696	Vial
20	CDA50/207-20	25697	Bolt
21	CDA50/207-21	25699	Circlip
22	CDA50/207-22	25700	Gasket
23	CDA50/207-23	25701	Connecting rod
24	CDA50/207-24	25702	Bolt
25	CDA50/207-25	25703	Crank
26	CDA50/207-26	25704	Crankcase
27	CDA50/207-27	25706	Sealing ring
28	CDA50/207-28	25707	Bearing
29	CDA50/207-29	25708	Field
30	CDA50/207-30	25709	Stator
31	CDA50/207-31	25713	Bearing
32	CDA50/207-32	25721	Washer
33	CDA50/207-33	25723	Motor cover
34	CDA50/207-34	25737	Bolt
35	CDA50/207-35	25744	Motor cover
36	CDA50/207-36	25752	Circlip
37	CDA50/207-37	25753	Connector
38	CDA50/207-38	25756	Fan cover
39	CDA50/207-39	25758	Nut
40	CDA50/207-40	25763	Washer
41	CDA50/207-41	25769	Capacitor
42	CDA50/207-42	25770	Nut
43	CDA50/207-43	225771	Check valve
44	CDA50/207-44	25777	Release pipe
45	CDA50/207-45	25778	Bolt

KEY No.	PART No.	STOCK No.	DESCRIPTION
46	CDA50/207-46	25780	Discharge pipe
47	CDA50/207-47	25784	Nut
48	CDA50/207-48	25785	Spring
49	CDA50/207-49	25786	Washer
50	CDA50/207-50	25787	Bush
51	CDA50/207-51	25788	Wheel
52	CDA50/207-52	25789	Bolt
53	CDA50/207-53	25791	Foot
54	CDA50/207-54	25804	Tank
55	CDA50/207-55	25809	Bung
56	CDA50/207-56	25828	Nut
57	CDA50/207-57	25829	Plug and cable
58	CDA50/207-58	25831	Cable
59	CDA50/207-59	25833	Safety valve
60	CDA50/207-60	25851	Pressure gauge
61	CDA50/207-61	25871	Regulator gauge
62	CDA50/207-62	25872	Quick coupler
64	CDA50/207-64	25880	Pressure switch

Helpline: +44 (0) 23 8049 4344 Sales Desk: +44 (0) 23 8049 4333 General Enquiries: +44 (0) 23 8026 6355 internet: drapertools.com email: sales@drapertools.com

Draper Tools Limited, Hursley Road, Chandler's Ford, Eastleigh, Hampshire. SO53 1YF UK.