230V 255/305mm

DOUBLE BEVEL SLIDING COMPOUND MITRE SAW

GB

79899 - SMS255E SPARE PARTS DRAWING

3 Year WARRANTY

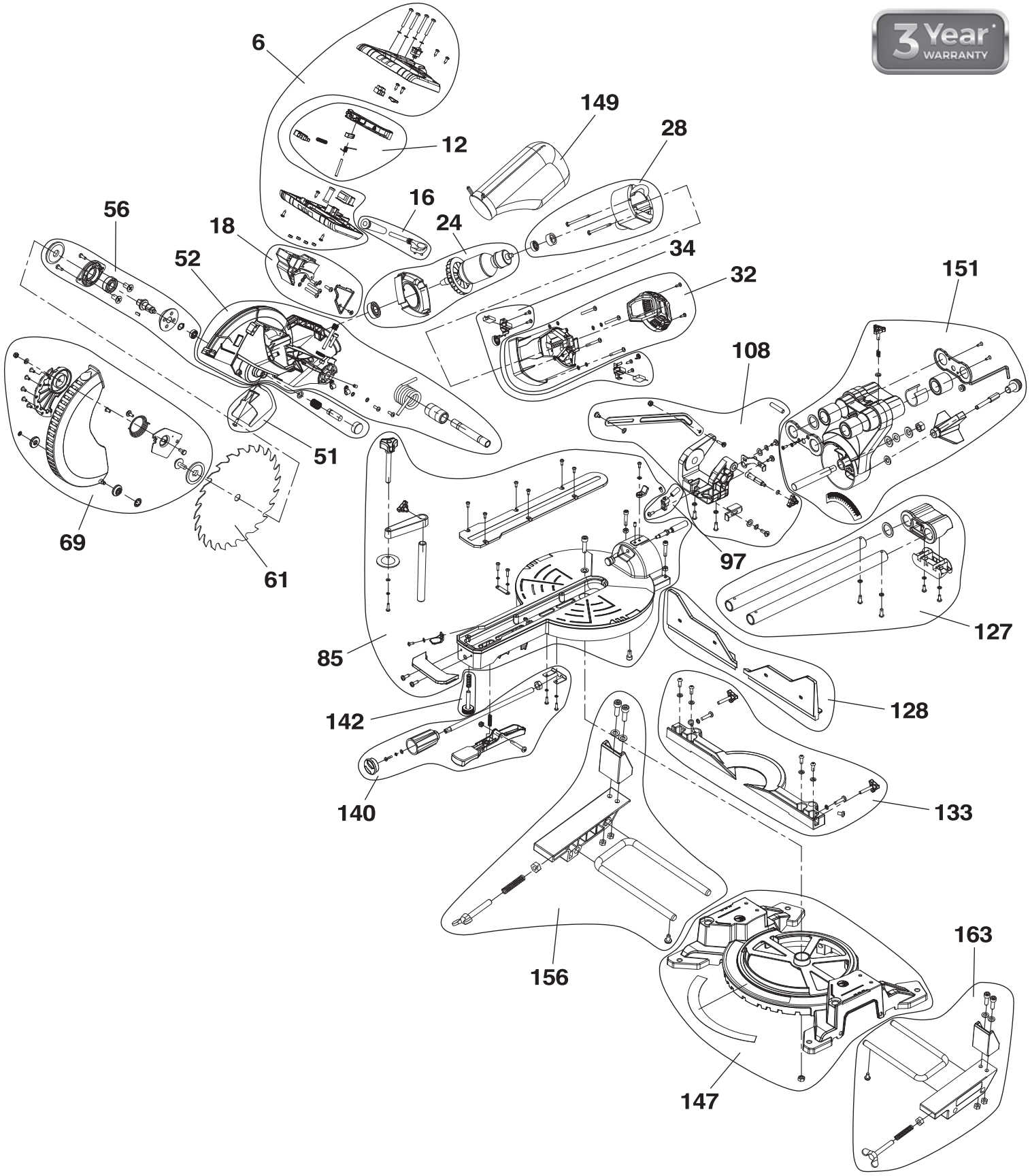

Helpline: +44 (0) 23 8049 4344 Sales Desk: +44 (0) 23 8049 4333 General Enquiries: +44 (0) 23 8026 6355 internet: drapertools.com email: sales@drapertools.com

Draper Tools Limited, Hursley Road, Chandler's Ford, Eastleigh, Hampshire. SO53 1YF UK.

TAKC1219

230V 255/305mm

DOUBLE BEVEL SLIDING COMPOUND MITRE SAW

GB

79899 - SMS255E SPARE PARTS LISTING

3 Year WARRANTY

KEY No.	PART No.	STOCK No.	DESCRIPTION
6	YSMS255E-6	97677	Handle assembly
12	YSMS255E-12	97679	Switch Trigger assembly
16	YSMS255E-16	97681	Power cord and plug assembly
18	YSMS255E-18	97682	Connection support assembly
24	YSMS255E-24	97683	Armature assembly
28	YSMS255E-28	97684	Stator assembly
32	YSMS255E-32	97686	Motor housing assembly
34	YSMS255E-34	97687	Carbon brush assembly (pair)
51	YSMS255E-51	97688	Dust chimney assembly
52	YSMS255E-52	97689	Blade guard assembly
56	YSMS255E-56	97690	Gear box assembly
61	YSMS255E-61	84140	Blade
69	YSMS255E-69	97691	Lower blade guard assembly
85	YSMS255E-85	97693	Turntable assembly
97	YSMS255E-97	97694	Laser assembly
108	YSMS255E-108	97695	Bracket assembly
127	YSMS255E-127	97696	Slide bar assembly
128	YSMS255E-128	97697	Slide fence (pair)
133	YSMS255E-133	97698	Fence assembly
140	YSMS255E-140	97699	Mitre angle lock rod assembly
142	YSMS255E-142	97700	Front table support foot assembly
147	YSMS255E-147	97701	Base assembly
149	YSMS255E-149	97702	Dust bag
151	YSMS255E-151	97710	Arm assembly
156	YSMS255E-156	97712	Left extension table assembly
163	YSMS255E-163	97713	Right extension table assembly

KEY No.	PART No.	STOCK No.	DESCRIPTION

Helpline: +44 (0) 23 8049 4344 Sales Desk: +44 (0) 23 8049 4333 General Enquiries: +44 (0) 23 8026 6355 internet: drapertools.com email: sales@drapertools.com

Draper Tools Limited, Hursley Road, Chandler's Ford, Eastleigh, Hampshire. SO53 1YF UK.