PARTS FOR:
SPRAY GUN SUCTION FEED GENERAL PURPOSE 1.5mm SET-UP
MODEL: **SSG2.V2**

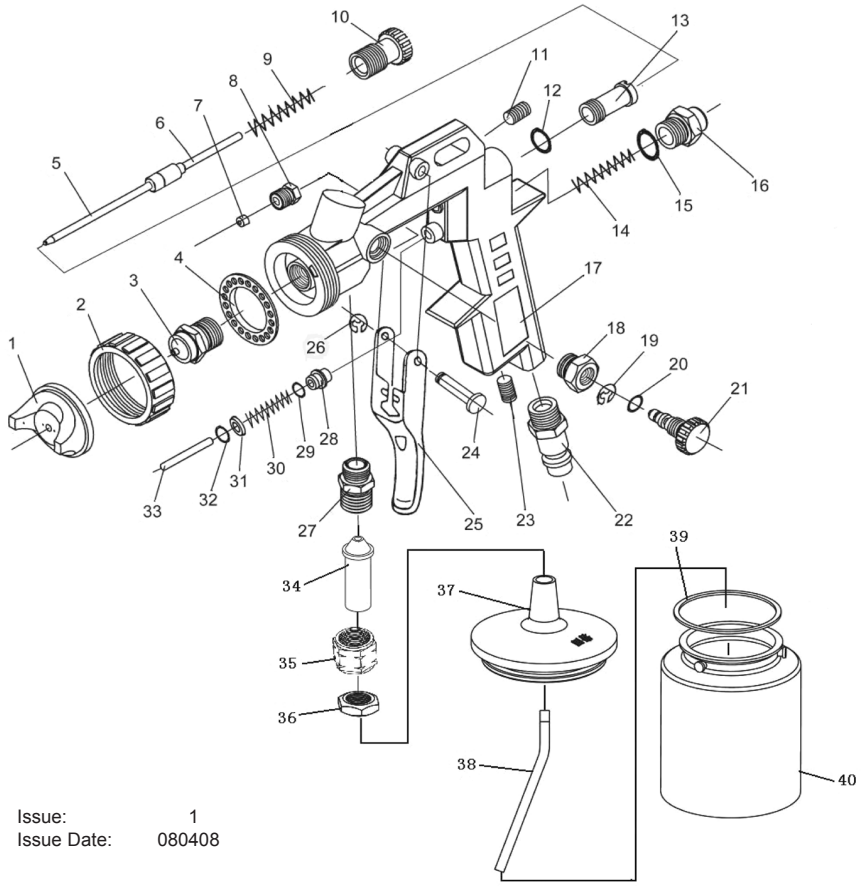

Issue: 1
Issue Date: 080408

ITEM	PART NO	DESCRIPTION
1	SSG2.V2-01	AIR CAP (1.5mm)
	SSG2.V2-01A	AIR CAP (1.2mm)
	SSG2.V2-01B	AIR CAP (1.8mm)
	SSG2.V2-01C	AIR CAP (2.0mm)
	SSG2.V2-01D	AIR CAP (2.2mm)
	SSG2.V2-01E	AIR CAP (2.5mm)
2	SSG2.V2-02	AIR CAP RETAINING RING
3	SSG2.V2-03	FLUID NOZZLE (1.5mm)
	SSG2.V2-03A	FLUID NOZZLE (1.2mm)
	SSG2.V2-03B	FLUID NOZZLE (1.8mm)
	SSG2.V2-03C	FLUID NOZZLE (2.0mm)
	SSG2.V2-03D	FLUID NOZZLE (2.2mm)
	SSG2.V2-03E	FLUID NOZZLE (2.5mm)
4	SSG2.V2-04	GASKET
5	SSG2.V2-05	FLUID NEEDLE (1.5mm)
	SSG2.V2-05A	FLUID NEEDLE (1.2mm)
	SSG2.V2-05B	FLUID NEEDLE (1.8mm)
	SSG2.V2-05C	FLUID NEEDLE (2.0mm)
	SSG2.V2-05D	FLUID NEEDLE (2.2mm)
	SSG2.V2-05E	FLUID NEEDLE (2.5mm)
6	SSG2.V2-06	SPRING AXIS
7	SSG2.V2-07	PACKING
8	SSG2.V2-08	PACKING SEAT
9	SSG2.V2-09	FLUID NEEDLE SPRING
10	SSG2.V2-10	FLUID ADJUSTMENT KNOB
11	SSG2.V2-11	PLUG-IN SCREW
12	SSG2.V2-12	O-RING
13	SSG2.V2-13	FLUID ADJUSTMENT GUIDE
14	SSG2.V2-14	AIR VALVE SPRING
15	SSG2.V2-15	O-RING
16	SSG2.V2-16	PACKING SEAT
17	SSG2.V2-17	BODY
18	SSG2.V2-18	PACKING SEAT

ITEM	PART NO	DESCRIPTION
19	SSG2.V2-19	STOP RING
20	SSG2.V2-20	O-RING
21	SSG2.V2-21	FLUID ADJUSTING SCREW
22	SSG2.V2-22	AIR JOINT
23	SSG2.V2-23	SCREW
24	SSG2.V2-24	TRIGGER STUD
25	SSG2.V2-25	TRIGGER
26	SSG2.V2-26	STOP RING
27	SSG2.V2-27	FLUID JOINT
28	SSG2.V2-28	AIR VALVE
29	SSG2.V2-29	O-RING
30	SSG2.V2-30	PACKING SPRING
31	SSG2.V2-31	GASKET
32	SSG2.V2-32	O-RING
33	SSG2.V2-33	AIR VALVE ROD
34	SSG2.V2-34	FLUID POT CONNECTOR
35	SSG2.V2-35	CONTACT NUT
36	SSG2.V2-36	HEX NUT
37	SSG2.V2-37	POT COVER
38	SSG2.V2-38	FLUID TUBE
39	SSG2.V2-39	POT GASKET
40	SSG2.V2-40	PLASTIC CUP

OPTIONAL SET-UPS

SSG2.V2-S1.2	SSG2 SET-UP 1.2mm
SSG2.V2-S1.5	SSG2 SET-UP 1.5mm
SSG2.V2-S1.8	SSG2 SET-UP 1.8mm
SSG2.V2-S2.0	SSG2 SET-UP 2.0mm
SSG2.V2-S2.2	SSG2 SET-UP 2.2mm
SSG2.V2-S2.5	SSG2 SET-UP 2.5mm

NOTE: *It is our policy to continually improve products and as such we reserve the right to alter data, specifications and component parts without prior notice.*
IMPORTANT: No liability is accepted for incorrect use of product.
WARRANTY: Guarantee is 12 months from purchase date, proof of which will be required for any claim.
INFORMATION: For a copy of our latest catalogue and promotions call us on 01284 757525 and leave your full name and address, including postcode.

Sole UK Distributor
Sealey Group,
Bury St. Edmunds, Suffolk.
01284 757500
01284 703534
www.sealey.co.uk
sales@sealey.co.uk