REV.	DATE	DESCRIPTION
B	09/08/98	REDIMENSION DRAWING/ ADD CABLE STRIPPING DIMS
C	02/08/03	UPDATE DRAWING FORMAT

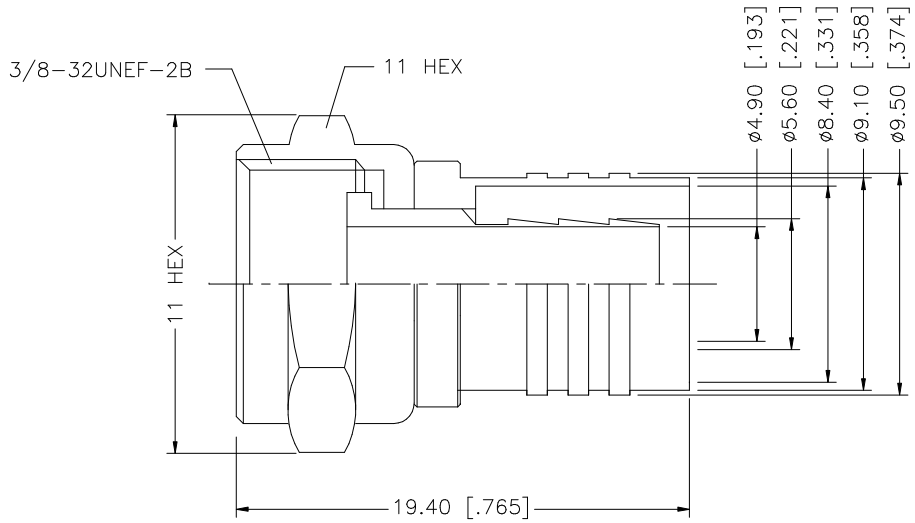

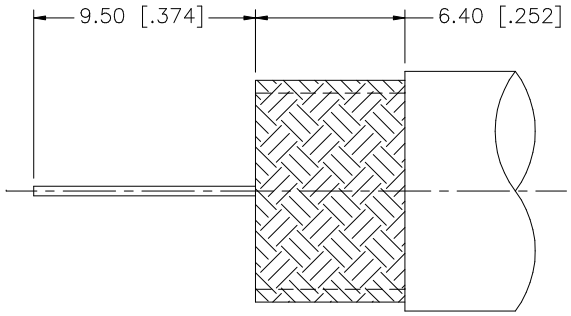

RECOMMENDED CABLE
STRIPPING DIMENSIONS

	DESCRIPTION	MATERIAL	FINISH	QTY
8				
7				
6				
5				
4				
3	HOUSING	BRASS	NICKEL	1
2	BODY	BRASS	NICKEL	1
1	SHELL	BRASS	NICKEL	1

UNLESS OTHERWISE SPECIFIED DIMENSIONS ARE IN MILLIMETERS. DIMENSIONS IN [ ] ARE IN INCHES AND FOR CUSTOMER REFERANCE ONLY.

UNLESS OTHERWISE SPECIFIED TOLERANCES FOR MILLIMETERS ARE:
0.5 – 8mm ± 0.20mm
8 – 30mm ± 0.40mm
30 – 120mm ± 0.50mm

UNLESS OTHERWISE SPECIFIED TOLERANCES FOR INCHES ARE:
.020 – .315 = ± 0.007"
.315 – 1.180 = ± 0.015"
1.180 – 4.724 = ± 0.020"

DO NOT SCALE DRAWING

APPROVALS		DATE
DRAWN	G.R.S.	02/08/03
CHECKED		
ISSUED		
SHEET	1 OF 1	
CAD FILE	C:/222/222118.DWG	

Amphenol Connex

PART DESCRIPTION
F PLUG CF TYPE – 1 PIECE CRIMP
(FOR RG-6)

PART NO. 222118

DWG. NO.	REV.	SIZE	SCALE
222118.DWG	C	A	NA