GB

AIR

NIBBLER

70835 - DAT-AN SPARE PARTS DRAWING

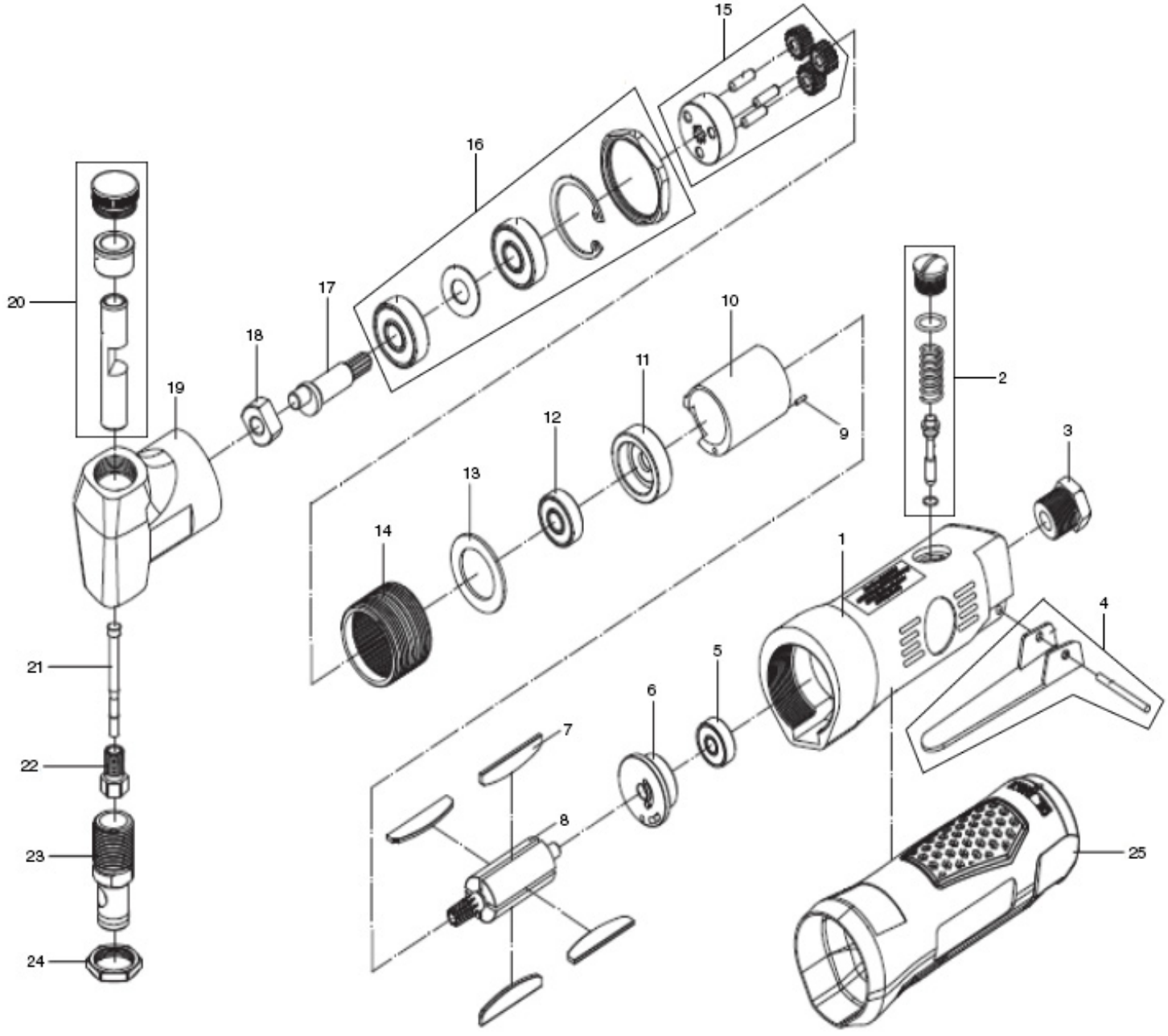

GB

DRAPER®

AIR NIBBLER

70835 - DAT-AN SPARE PARTS LISTING

KEY No.	PART No.	STOCK No.	DESCRIPTION
1	YDAT-AN-1	93543	Main housing
2	YDAT-AN-2	93547	Spring kit
3	YDAT-AN-3	93548	Air inlet
4	YDAT-AN-4	93549	Trigger kit
5	YDAT-AN-5	93550	Bearing
6	YDAT-AN-6	93551	Rear plate
7	YDAT-AN-7	93553	Rotor blade x4
8	YDAT-AN-8	93554	Rotor
9	YDAT-AN-9	93555	Bolt
10	YDAT-AN-10	93556	Cylinder
11	YDAT-AN-11	93557	Front plate
12	YDAT-AN-12	93558	Bearing
13	YDAT-AN-13	93559	Spacer
14	YDAT-AN-14	93560	Gear sleeve
15	YDAT-AN-15	93561	Gear kit
16	YDAT-AN-16	93562	Bearing kit
17	YDAT-AN-17	93563	Bias axle
18	YDAT-AN-18	93564	Rotating rod
19	YDAT-AN-19	93565	Front housing
20	YDAT-AN-20	93566	Sliding shaft kit
21	YDAT-AN-21	93567	Blade
22	YDAT-AN-22	93568	Blade base
23	YDAT-AN-23	93569	Die
24	YDAT-AN-24	93570	Screw nut
25	YDAT-AN-25	93571	Soft grip

KEY No.	PART No.	STOCK No.	DESCRIPTION

Helpline: +44 (0) 23 8049 4344 Sales Desk: +44 (0) 23 8049 4333 General Enquiries: +44 (0) 23 8026 6355 internet: drapertools.com email: sales@drapertools.com

Draper Tools Limited, Hursley Road, Chandler's Ford, Eastleigh, Hampshire. SO53 1YF UK.

DBCM1119