DO NOT SCALE DRAWING

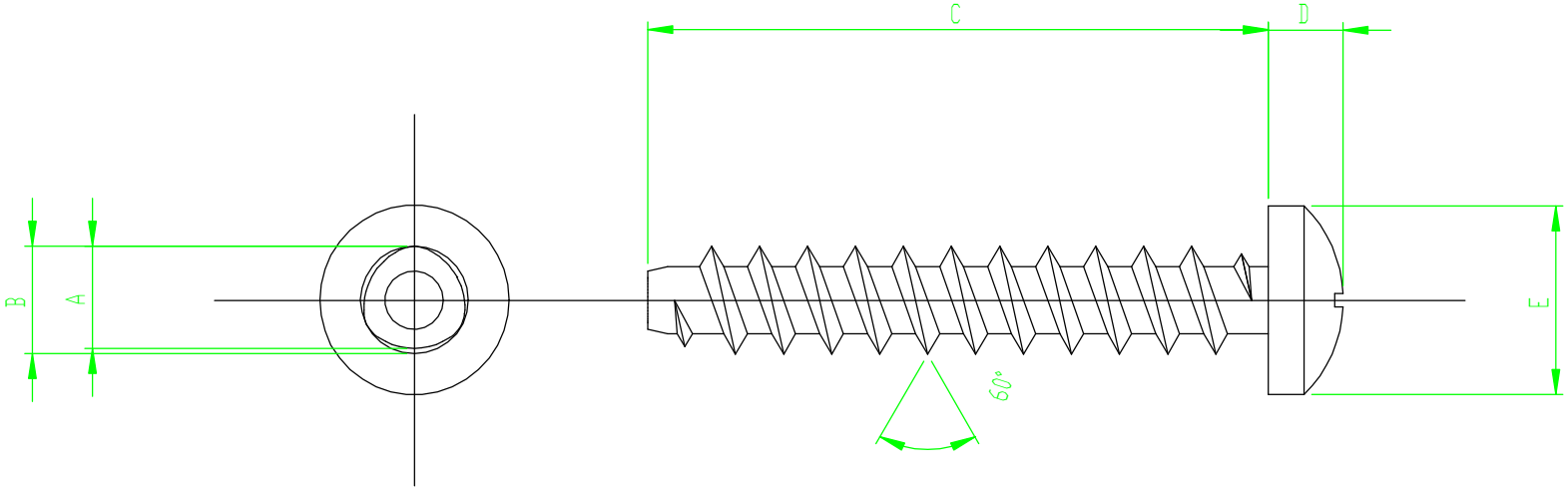

REVISION	
A	INITIAL DRAWING DW 22.12.15
B	TABLE COLUMN CORRECTION DW 12.09.19

Part Number	Size	A Max	B Max	Recess Size	C	D Ref	E Max
N4 0.250 PRST60 Z100	N4-20	0.123	0.127	Pozi No 1	0.250 (1/4")	0.080	0.219
N4 0.375 PRST60 Z100	N4-20	0.123	0.127	Pozi No 1	0.375 (3/8")	0.080	0.219
N4 0.500 PRST60 Z100	N4-20	0.123	0.127	Pozi No 1	0.500 (1/2")	0.080	0.219
N4 0.625 PRST60 Z100	N4-20	0.123	0.127	Pozi No 1	0.625 (5/8")	0.080	0.219
N4 0.750 PRST60 Z100	N4-20	0.123	0.127	Pozi No 1	0.750 (3/4")	0.080	0.219
N6 0.500 PRST60 Z100	N6-19	0.143	0.147	Pozi No 2	0.500 (1/2")	0.097	0.270
N6 0.625 PRST60 Z100	N6-19	0.143	0.147	Pozi No 2	0.625 (5/8")	0.097	0.270
N8 0.375 PRST60 Z100	N8-16	0.179	0.185	Pozi No 2	0.375 (3/8")	0.115	0.322
N8 0.500 PRST60 Z100	N8-16	0.179	0.185	Pozi No 2	0.500 (1/2")	0.115	0.322

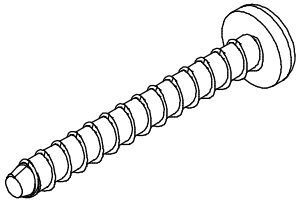

NOTES:
Other Size / Lengths available on request.

TR Fastenings

UNLESS OTHERWISE SPECIFIED:
DIMENSIONS ARE IN Inches
SURFACE FINISH:
TOLERANCES:

	NAME	DATE
DRAWN	Darryl Wilson	22.12.15
CHK'D		
APPV'D		

MATERIAL:
Steel

HEAT TREATMENT:
Through Hardened

TITLE:
Pozi Pan Head Plas-Fix 60 Screw for Plastic

DESIGN RIGHT. TR FASTENINGS LTD. 2003
UNDER NO CIRCUMSTANCES MUST THIS DRAWING BE COPIED OR DISCLOSED WITHOUT FIRST OBTAINING WRITTEN AUTHORITY.

CUSTOMER PART NUMBER:
N/A

FINISH:
TC1D - Commercial Zinc/Clear Trivalent
De-Embrittle

DRAWING NUMBER:
TR32PRST60Z100

A4

PROJECTION

Sheet 1 of 1