REVISIONS		
ISS	ZONE	DESCRIPTION\PER REQUEST\DATE

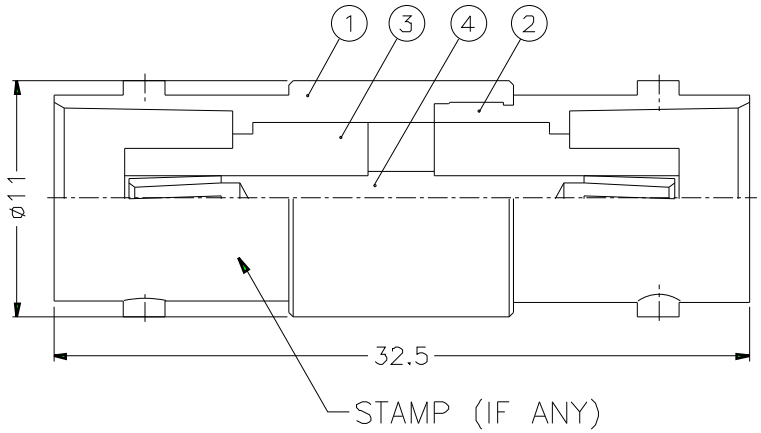

NOTES: FINISH (PLATING THICKNESS IN MICRO-INCHES)
1. BRASS PER QQ-B-626
2. NICKEL PL. 100 MIN. THICK OVER COPPER STRIKE
3. PHOSPHOR BRONZE PER QQ-B-750
4. GOLD PL. 3 MIN. THICK OVER NICKEL PL. 100 MIN. THICK OVER COPPER STRIKE

NO.	DESCRIPTION	MATERIAL	FINISH	Q'TY	DRAWING NO.
4	CONTACT PIN	NOTE 3	NOTE 4	1	B7900-4
3	INSULATOR	DELRIN	NATURAL	2	B7996ZZ-3-50
2	BODY	NOTE 1	NOTE 2	1	B74000-2
1	HOUSING	NOTE 1	NOTE 2	1	B7900-1

DIMENSIONS ARE IN MILLIMETERS

UNLESS OTHERWISE SPECIFIED TOLERANCES
0.5-6 = ±0.2
6-30 = ±0.4
30-120 = ±0.6
120-315 = ±1
315-1000 = ±1.6
1000-2000 = ±2.4

SCALE 3/1 | ISSUE A

PART NO. B7071A1-ND3G-50

APPROVED DATE 10-11-01'

CHECKED DATE 10-11-01'

DRAWN DATE 10-11-01'

FILE NO.

Amphenol

TITLE
BNC FEMALE TO FEMALE ADAPTOR

DRAWING NO.
KJ-B7071A1-ND3G-50

ITEM NO.