TSLA. | Side mounting top brackets

Technopolymer

INOX STAINLESS STEEL · RoHS · PA · +100° -30°

MATERIAL

Glass-fibre reinforced polyamide based (PA) technopolymer, black colour, matte finish.

STANDARD EXECUTIONS

- **TSLA-A**: zinc-plated steel M10 screw, nut and washer.
- **TSLA-SST**: AISI 304 stainless steel M10 screw, nut and washer.

FEATURES

Maximum tightening torque for screw assembly 35 Nm.

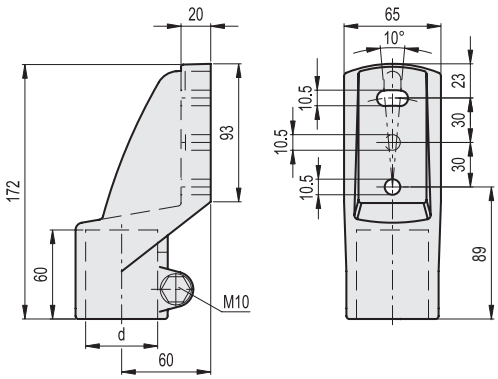

TSLA-A

Code	Description	d Tube (mm)	d Tube (GAS)	⚖
419648	TSLA-48-A	48.3	1"1/2	320

TSLA-SST INOX STAINLESS STEEL

419649	TSLA-48-SST	48.3	1"1/2	320

TSLB. | Side mounting top brackets

Technopolymer

INOX STAINLESS STEEL · RoHS · PA · +100° -30°

MATERIAL

Glass-fibre reinforced polyamide based (PA) technopolymer, black colour, matte finish.

STANDARD EXECUTIONS

- **TSLB-A**: zinc-plated steel M10 screw, nut and washer.
- **TSLB-SST**: AISI 304 stainless steel M10 screw, nut and washer.

FEATURES

Maximum tightening torque for screw assembly 35 Nm.

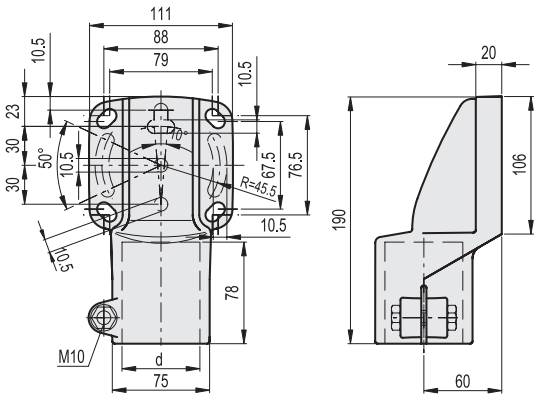

TSLB-A

Code	Description	d Tube (mm)	d Tube (GAS)	⚖
419794	TSLB-42-A	42.4	1"1/4	435
419792	TSLB-48-A	48.3	1"1/2	430
419790	TSLB-60-A	60.3	2"	425
419796	TSLB-45x45-A	45	-	430

TSLB-SST INOX STAINLESS STEEL

419795	TSLB-42-SST	42.4	1"1/4	435
419793	TSLB-48-SST	48.3	1"1/2	430
419791	TSLB-60-SST	60.3	2"	425
419797	TSLB-45x45-SST	45	-	430

Models all rights reserved in accordance with the law. Always mention the source when reproducing our drawings and photos.