Accessories
for modular terminals

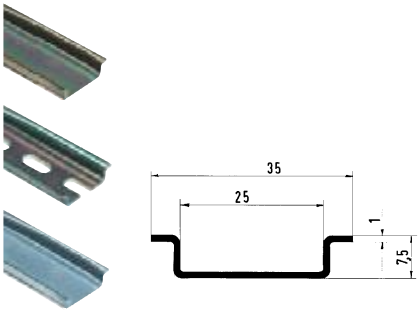

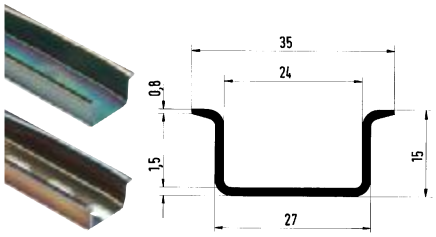

			Mounting rail 35 x 7.5 according to DIN EN 60715			Mounting rail 35 x 15 according to DIN EN 60715		
			Type	Part No.	Box Qty	Type	Part No.	Box Qty
Mounting rail								
1. Steel, galvansied and chromated,	solid	L = 2 m	35 x 27 x 7,5 EN 60715	98.300.0000.0	1	35 x 27 x 15 EN 60715	98.370.0000.0	1
Steel, galvansied and chromated,	slotted	L = 2 m	35 x 27 x 7,5 EN 60715 slotted	98.300.1000.0	1	35 x 27 x 15 EN 60715	98.370.1000.0	1
2. Steel, brightly polished	solid	L = 2 m	35 x 27 x 7,5 EN 60715 blank	98.300.0010.0				
Steel, brightly polished	slotted	L = 2 m						
3. Steel, hot-dip galvanised	solid	L = 2 m						
Steel, hot-dip galvanised	slotted	L = 2 m						
4. E-Cu	solid	L = 2 m						
E-Cu	slotted	L = 2 m						
5. Steel, galvanised and chromated	slotted	L = 1 m						
Steel, galvanised and chromated	slotted	L = 2 m						
Aluminium	solid	L = 2 m						